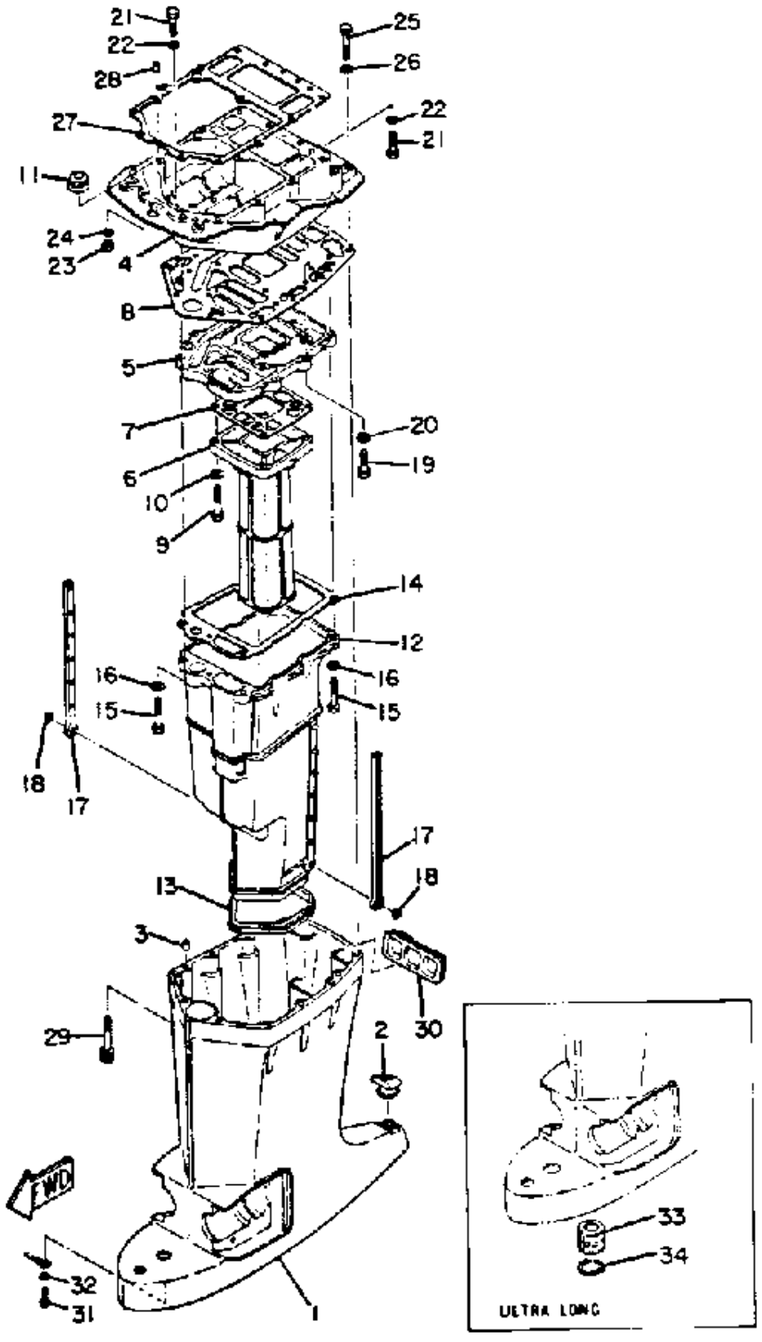

115etlk_etxk

UPPER CASING

Ref No.	Part Number	Description	Qty	Remarks
1	6E5-45111-00-EK	CASING, UPPER	1	U.R. (LK)
1	6E5-45111-20-EK	CASING, UPPER	1	U.R. (XK)
2	6E5-45155-00-00	CAP	1	
3	93608-12M05-00	PIN, DOWEL	2	
4	6E5-41137-01-94	EXHAUST GUIDE	1	
5	6E5-41131-00-5B	EXHAUST MANIFOLD 1 (6E5-41131-00-9M)	1	
6	6E5-41132-00-5B	EXHAUST MANIFOLD 2 (6E5-41132-00-9M)	1	
7	6E5-41134-00-00	GASKET, EXH.MANI.2 EXHAUST MANIFOLD 2	1	
8	6E5-45114-00-00	GASKET, UPPER CASNG	1	
9	97395-08045-00	BOLT	4	
10	92990-08600-00	.WASHER, PLATE	4	
11	6E5-42724-00-00	GROMMET	1	
12	6E5-14711-00-5B	MUFFLER 1 (6E5-14711-00-9M)	1	
13	6E5-45123-00-00	.GASKET, MUFFLER	1	
14	6E5-41135-00-00	GASKET, EXHAUST MANIFOLD	1	
15	97395-08045-00	BOLT	5	
16	92990-08600-00	.WASHER, PLATE	5	
17	6E5-14737-00-00	DAMPER, MUFFLER	2	
18	90183-05M02-00	NUT, SPRING	2	
19	97395-08030-00	BOLT	4	

CONTINUED ON NEXT FRAME >

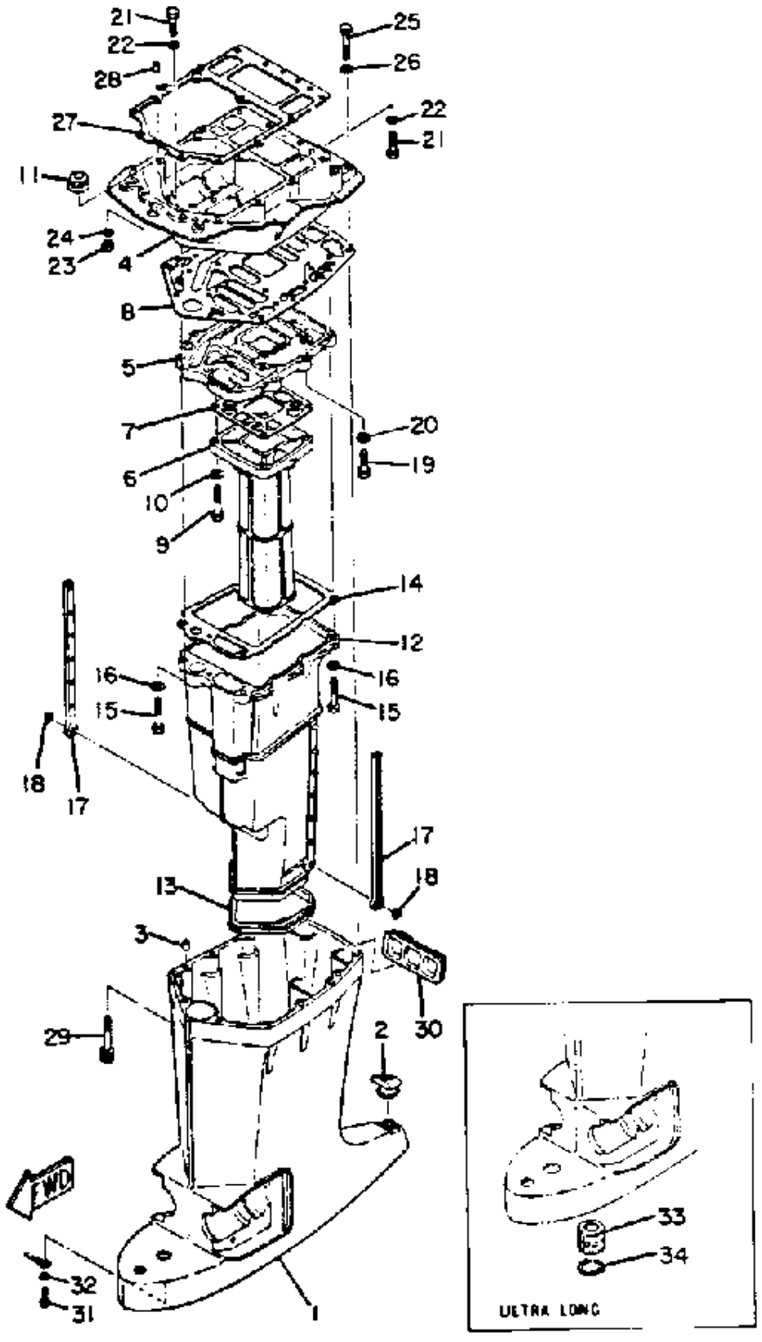

115etlk_etxk

UPPER CASING

Ref No.	Part Number	Description	Qty	Remarks
20	92990-08600-00	.WASHER, PLATE	4	
21	97395-08030-00	BOLT	6	
22	92990-08100-00	.WASHER, SPRING	6	
23	95380-08700-00	NUT	2	
24	92990-08100-00	.WASHER, SPRING	2	
25	97395-08045-00	BOLT	2	
26	92990-08100-00	.WASHER, SPRING	2	
27	6E5-45113-A0-00	GASKET, UPPER CASIN	1	
28	93608-12M05-00	PIN, DOWEL	2	
29	90119-08M78-00	BOLT, WITH WASHER	6	
30	6E5-42769-00-00	SEAL, RUBBER	1	
31	97395-06010-00	BOLT	1	
32	92990-06600-00	WASHER, PLATE	1	
33	6E5-45318-00-00	BUSHING, DRIVE SHAFT	1	U.R. (XK)
34	93420-36M01-00	CIRCLIP	1	U.R. (XK)