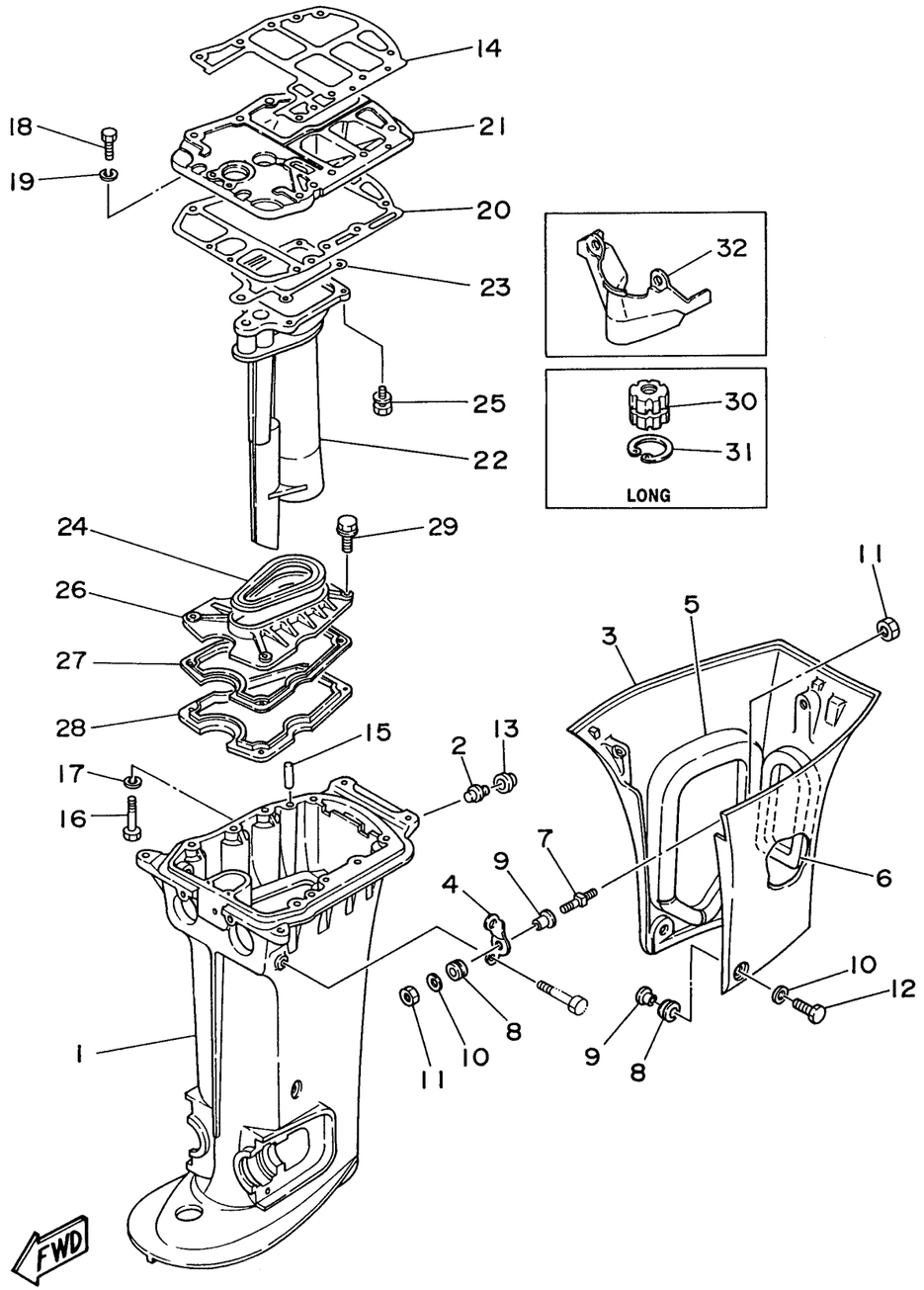

UPPER CASING

Ref No.	Part Number	Description	Qty	Remarks
1	6A0-45111-12-4D	CASING, UPPER	1	UR LONG
1	6A0-45111-02-4D	CASING, UPPER	1	UR SHORT
2	6A0-42761-00-00	STOPPER	1	
3	6A0-42741-01-4D	APRON	1	
4	6A0-42744-00-00	STAY	2	
5	6A0-42768-00-00	DAMPER	2	
6	6A0-42769-00-00	SEAL, RUBBER	1	
7	6A0-42742-00-00	BOLT	2	
8	90480-12M11-00	GROMMET	4	
9	6A0-42758-00-00	OLLAR	4	
10	90201-06M31-00	.WASHER, PLATE	4	
11	95380-06600-00	NUT, HEXAGON	4	
12	97395-06022-00	BOLT	2	
13	663-42662-00-00	.DAMPER	1	
14	6F5-45113-A0-00	GASKET, UPPER CASING	1	
15	93606-25M00-00	PIN, DOWEL	2	
16	97395-08040-00	BOLT	8	
17	92990-08100-00	.WASHER, SPRING	8	
18	97095-06025-00	.BOLT	3	
19	92995-06100-00	WASHER, SPRING	3	

CONTINUED ON NEXT FRAME >

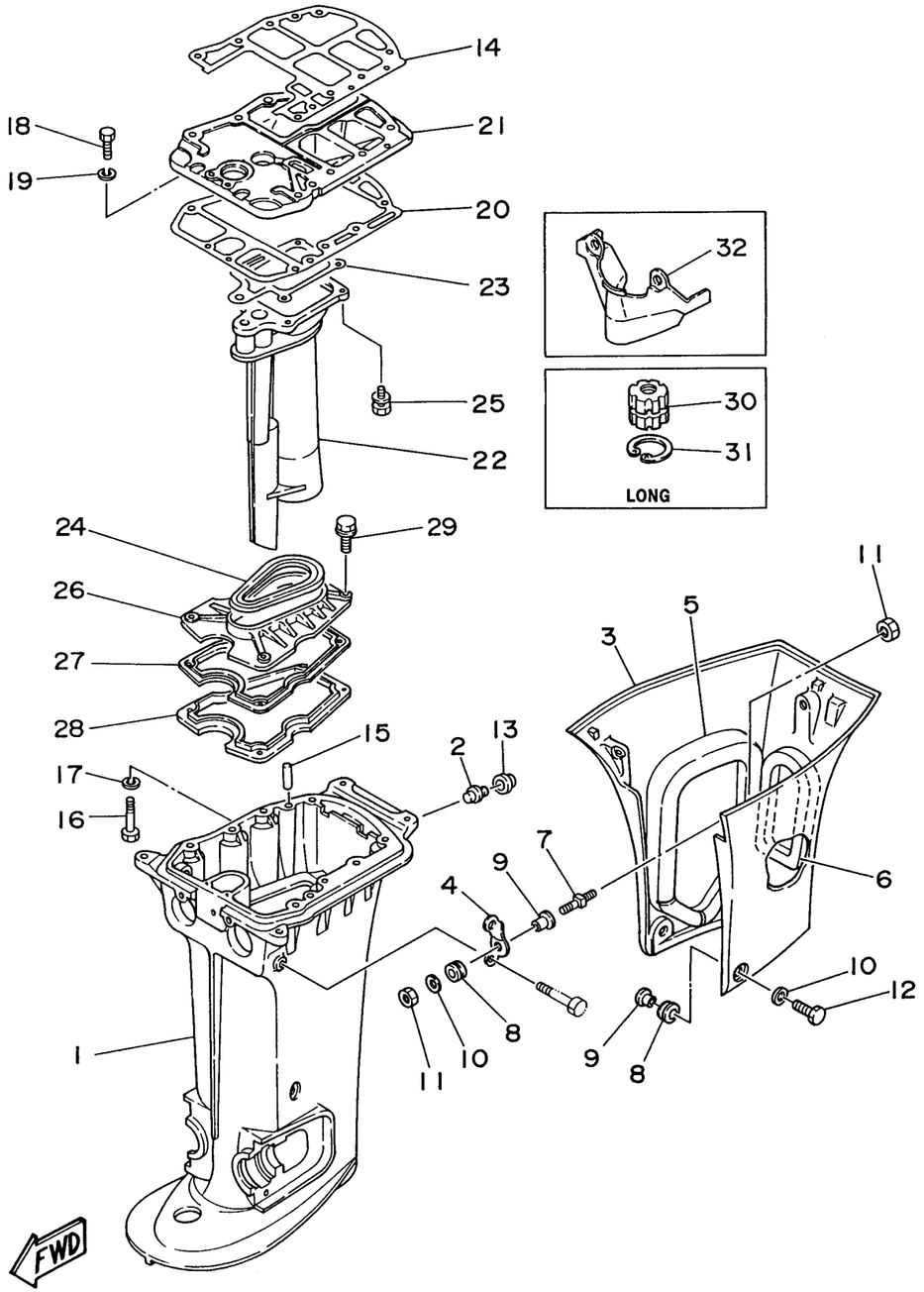

UPPER CASING

Ref No.	Part Number	Description	Qty	Remarks
20	676-45114-A0-00	GASKET, UPPER CASING	1	
21	676-41137-04-94	GUIDE, EXHAUST	1	
22	6E9-41131-00-5B	MANIFOLD, EXT. 1	1	
23	676-41133-A0-00	GASKET, EXHAUST MANIFOLD 1	1	
24	676-45127-00-00	SEAL	1	
25	97595-06420-00	BOLT, WITH WASHER	4	
26	676-41116-00-5B	PROTECTOR	1	
27	676-45128-00-00	SEAL 2	1	
28	676-45126-00-5B	PLATE, SEAL DAMPER	1	
29	90105-06M01-00	BOLT, WASHER BASED	4	
30	6A0-45318-00-00	BUSHING, DRIVE SHAFT	1	LONG
31	93420-36M01-00	CIRCLIP	1	LONG
32	676-45151-10-4D	COVER, UPPER CASING	1	UR LONG
32	676-45151-00-4D	COVER, UPPER CASING	1	UR SHORT