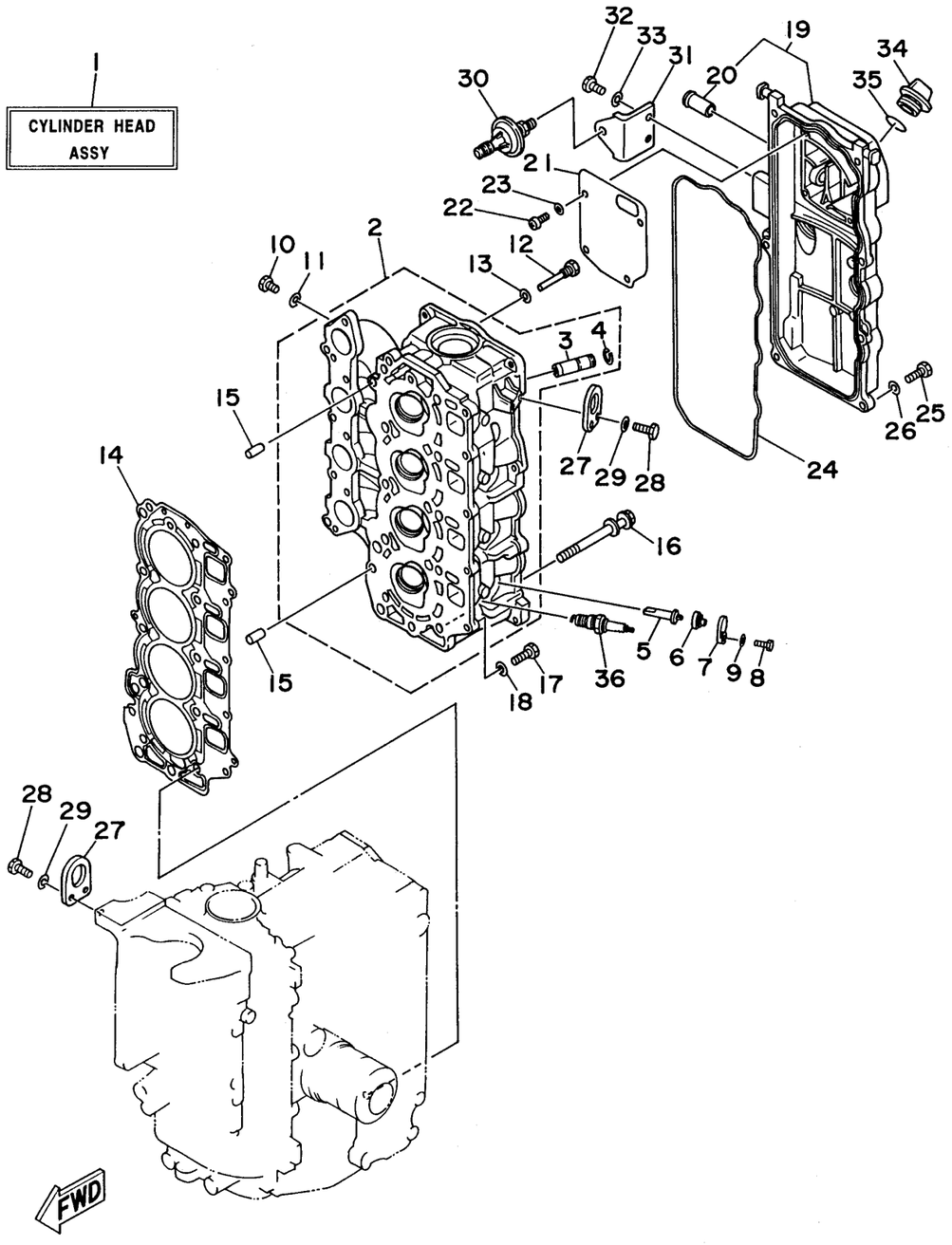

62YUS-8020

f50thw_trw_t50trw

CYLINDER CRANKCASE 2

Ref No.	Part Number	Description	Qty	Remarks
1	62Y-W009A-11-4D	CYLINDER HEAD COMPLETE	1	
2	62Y-11111-01-94	HEAD, CYLINDER 1	1	
3	62Y-11133-10-00	. .GUIDE, VALVE 1	8	
4	93450-09M01-00	. .CIRCLIP	8	
5	6J8-11325-00-00	ANODE	4	
6	62Y-11328-00-00	GROMMET, ANODE	4	
7	6H3-11327-00-94	COVER, ANODE	4	
8	97013-06020-00	BOLT	4	
9	92990-06600-00	WASHER, PLATE	4	
10	97095-06010-00	BOLT	4	
11	90430-06014-00	GASKET	4	
12	90109-06M65-00	BOLT	1	
13	90430-06014-00	GASKET	1	
14	62Y-11181-00-00	. GASKET, CYLINDER HEAD 1	1	
15	99530-08012-00	PIN, DOWEL	2	
16	90119-09M00-00	BOLT, WITH WASHER	10	
17	97013-06025-00	BOLT	5	
18	92990-06600-00	WASHER, PLATE	5	
19	62Y-11191-00-94	COVER, CYLINDER HEAD 1	1	
20	62Y-14485-00-00	. . .PIPE, JOINT	1	

CONTINUED ON NEXT FRAME >

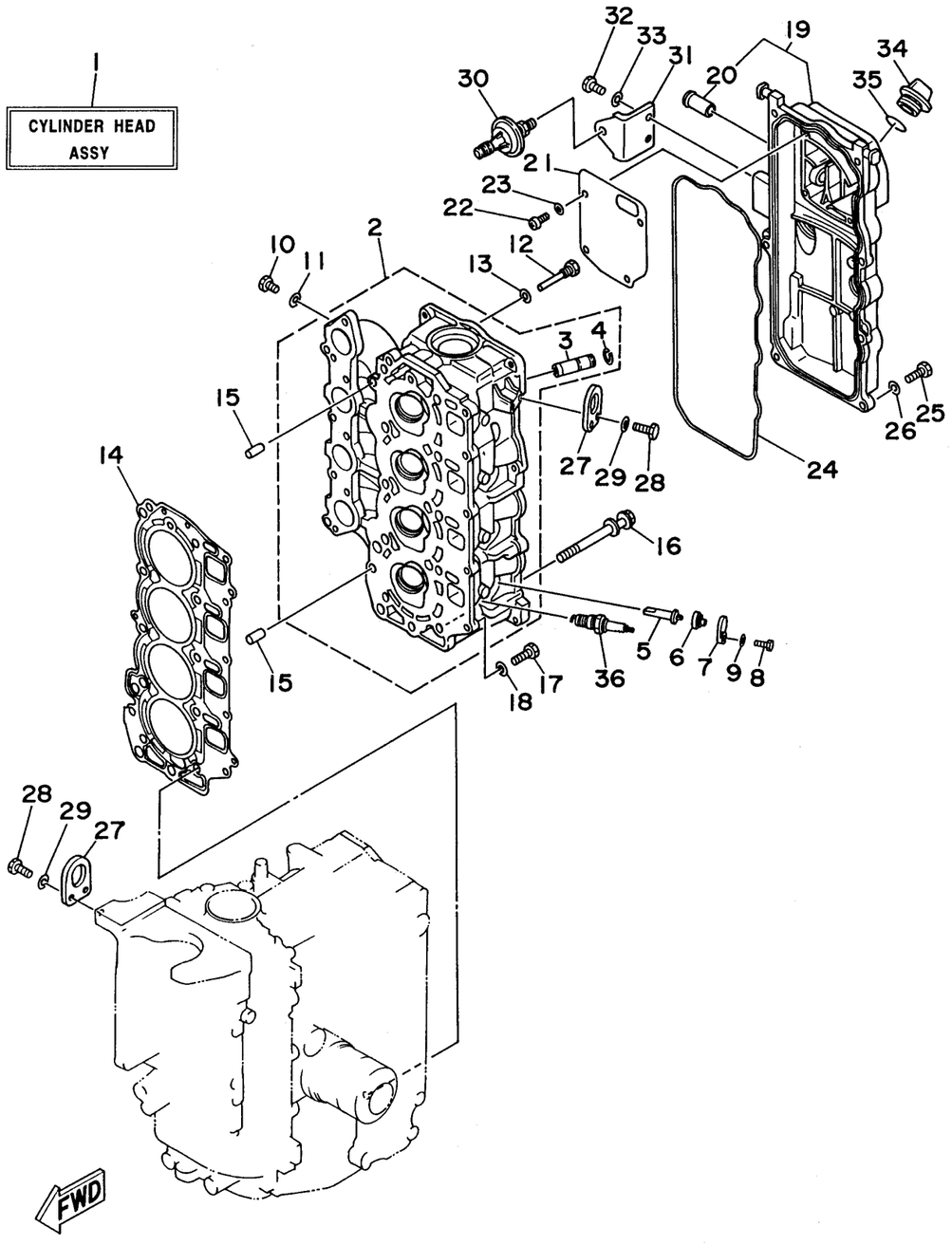

62YUS-8020

f50thw_trw_t50trw

CYLINDER CRANKCASE 2

Ref No.	Part Number	Description	Qty	Remarks
21	62Y-11168-00-00	COVER, BREATHER	1	
22	98507-04010-00	. SCREW, PAN HEAD	4	
23	92907-04600-00	. .WASHER	4	
24	62Y-11356-00-00	. .SEAL, CYLINDER 2	1	
25	97013-06020-00	BOLT	7	
26	92990-06600-00	WASHER, PLATE	7	
27	62Y-11119-00-00	HANGER, ENGINE	2	
28	97095-06020-00	BOLT	4	
29	92990-06600-00	WASHER, PLATE	4	
30	62Y-14368-01-00	DIAPHRAGM ASSY 1	1	
31	62Y-14413-00-00	STAY	1	
32	97095-06016-00	BOLT	2	
33	92990-06600-00	WASHER, PLATE	2	
34	6G8-15363-00-00	PLUG, OIL	1	
35	93210-25070-00	O-RING	1	
36	NGK-DPR6E-A9-00	PLUG, SPARK (NGK DPR6EA-9)	4	