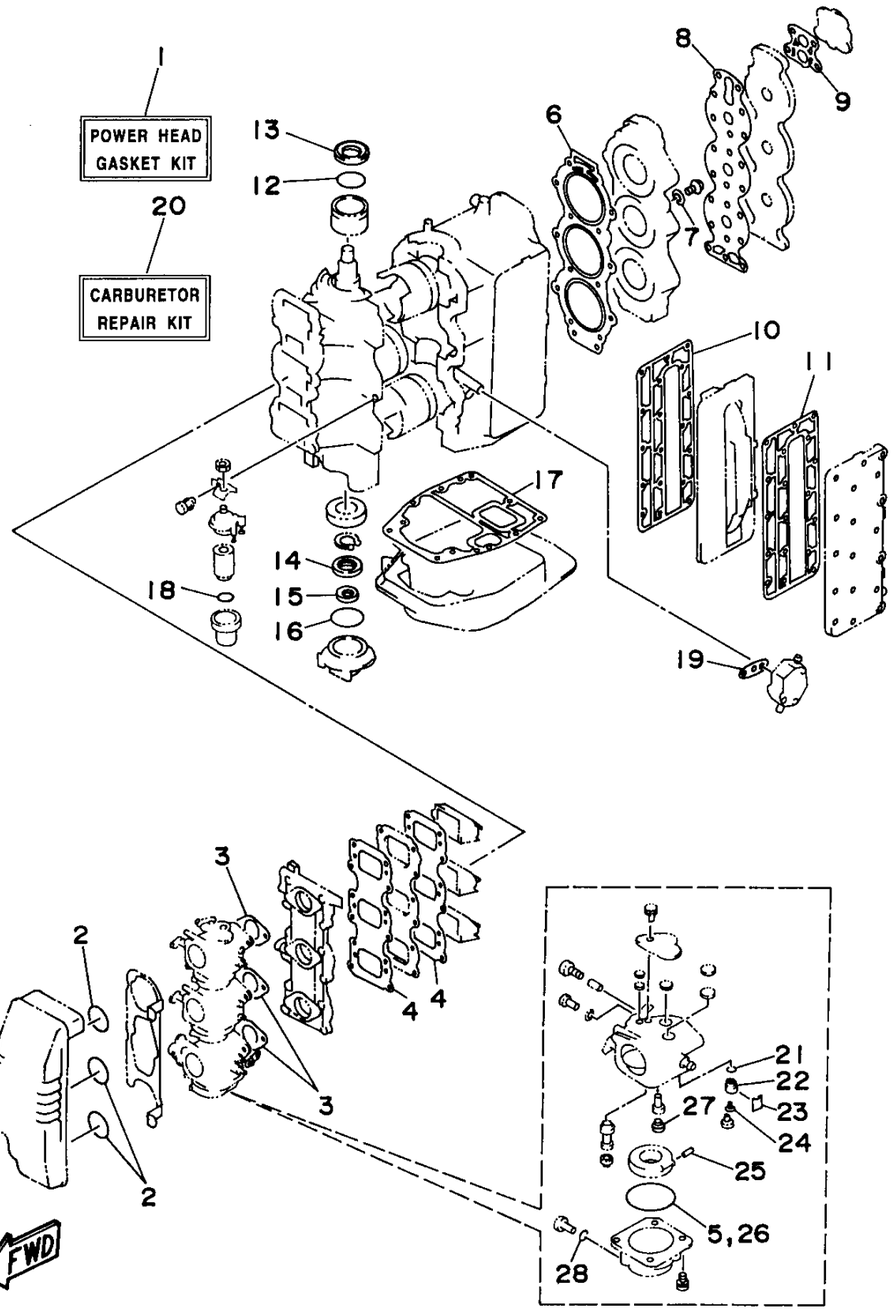

c75trx

REPAIR KIT 1

Ref No.	Part Number	Description	Qty	Remarks
1	6H0-W0001-00-00	POWER HEAD GASKET KIT	1	
2	93210-46044-00	. .O-RING	3	
3	688-14198-A1-00	. GASKET	3	
4	688-13621-A1-00	. .GASKET, VALVE SEAT	2	
5	676-14984-00-00	. GASKET, FLOAT CHAMBER	3	
6	688-11181-A1-00	. .GASKET, CYLINDER HEAD 1	1	
7	90430-14115-00	. .GASKET	1	
8	688-11193-A1-00	. GASKET, HEAD COVER 1	1	
9	688-12414-A1-00	. .GASKET, COVER	1	
10	688-41112-A0-00	. GASKET, EXHAUST INNER COVER	1	
11	688-41114-A0-00	. .GASKET, EXHAUST OUTER COVER	1	
12	93210-46M16-00	. .O-RING	1	
13	93102-36M24-00	. OIL SEAL	1	
14	93102-30M05-00	. .OIL SEAL	1	
15	93104-20M02-00	. OIL SEAL	1	
16	93210-62269-00	. O-RING	1	
17	688-45113-A0-00	. GASKET, UPPER CASING	1	
18	93210-32738-00	. .O-RING	1	
19	650-24431-A0-00	. GASKET, FUEL PUMP 1	1	
20	6H0-W0093-00-00	CARBURETOR REPAIR KIT	1	

CONTINUED ON NEXT FRAME >

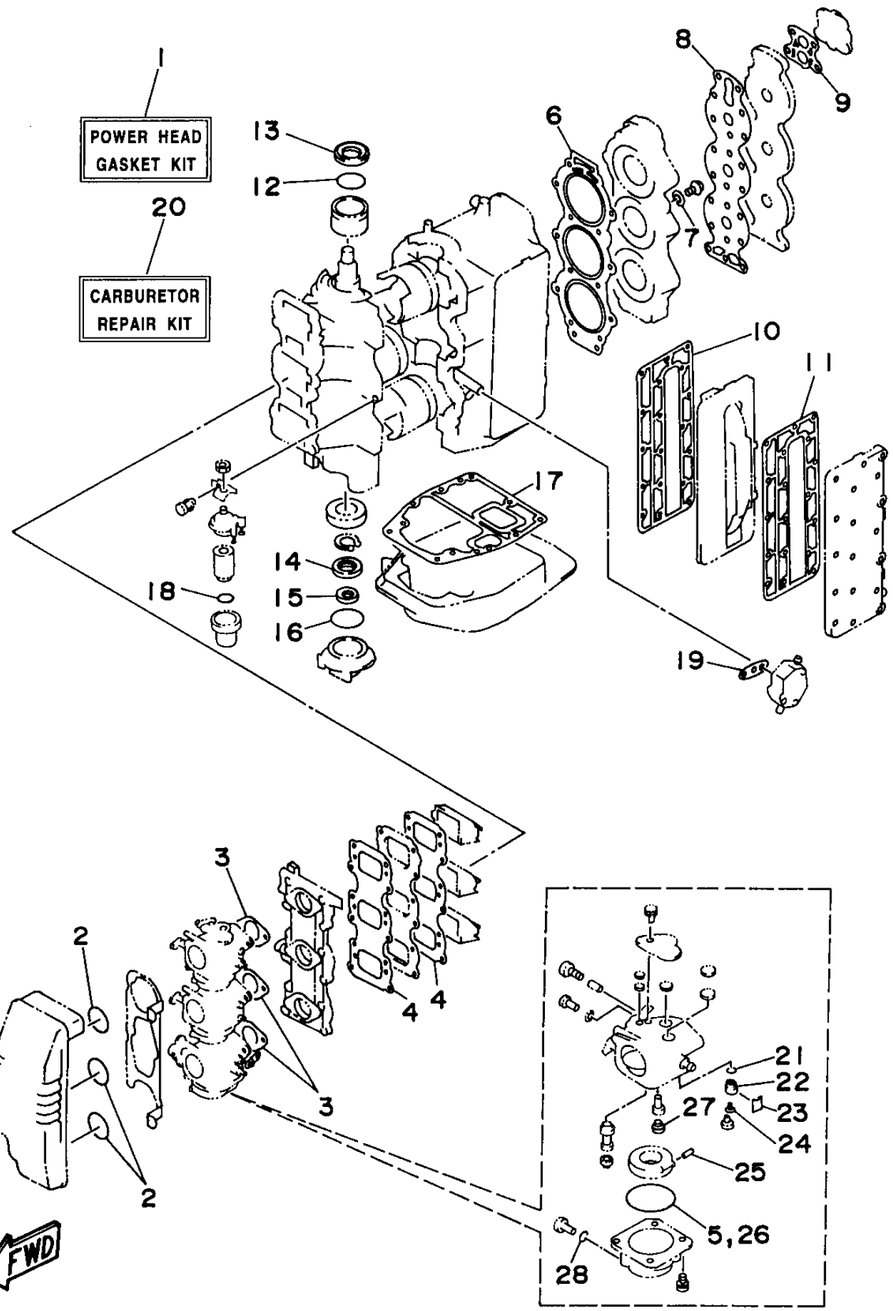

c75trx

REPAIR KIT 1

Ref No.	Part Number	Description	Qty	Remarks
21	93210-04228-00	. O-RING	1	
22	692-14590-00-00	. VALVE SEAT	1	
23	663-14159-00-00	. .CLIP	1	
24	676-14186-00-00	. PIN, FLOAT	1	
25	688-14548-00-00	. PIN, FLOAT ARM	1	
26	676-14984-00-00	. GASKET, FLOAT CHAMBER	1	
27	676-14966-00-00	. CAP	1	
28	93210-04230-00	. O-RING	1	