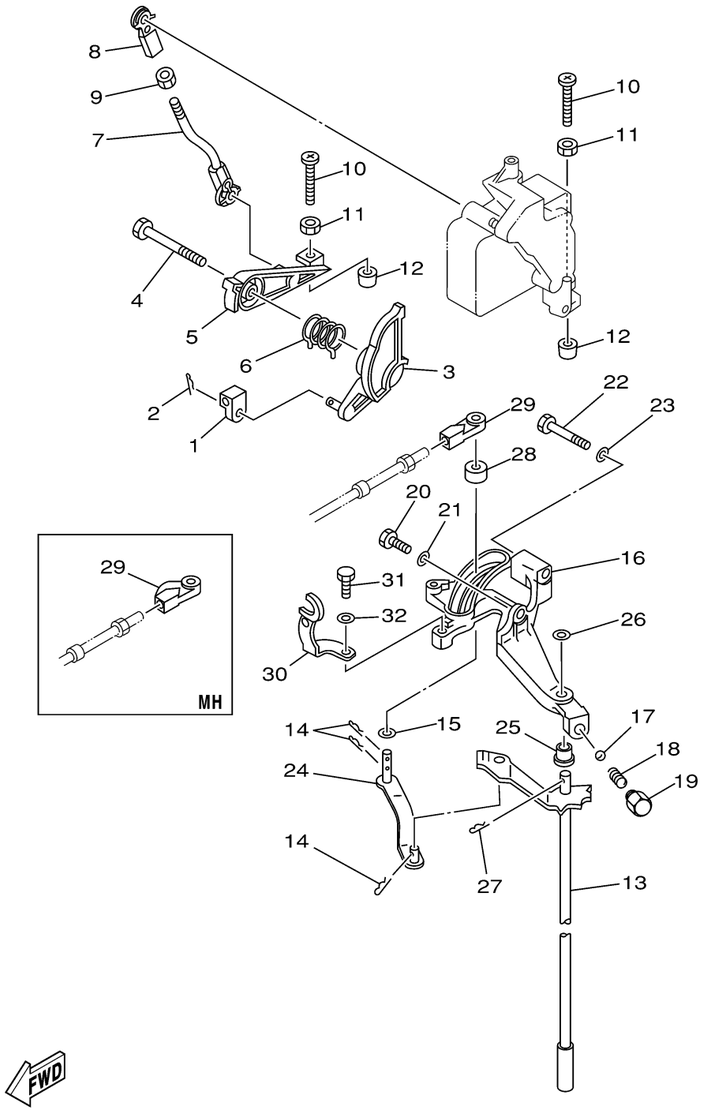

63D0100-0160

CONTROL

Ref No.	Part Number	Description	Qty	Remarks
1	6H4-48344-00-00	CABLE END, REMOTE CONTROL	1	
2	90468-18008-00	.CLIP	1	
3	63D-41213-00-00	CAM, ACCEL.	1	
4	90109-06M43-00	BOLT	1	
5	63D-41632-00-00	LEVER, MAGNETO CONTROL	1	
6	90508-26M35-00	SPRING, TORSION	1	
7	63D-41636-00-00	ROD, MAGNETO CONTROL	1	
8	6H4-41237-00-00	JOINT, LINK	1	
9	95380-05600-00	.NUT	1	
10	90157-06M13-00	SCREW, PAN HEAD	2	
11	95303-06600-00	.NUT	2	
12	688-44194-00-00	CAP	2	
13	63D-44120-10-00	HANDLE GEAR SHIFT ASSY	1	UR L(E)
13	63D-44120-00-00	HANDLE GEAR SHIFT ASSY	1	UR S
14	90468-18008-00	.CLIP	3	
15	90202-07M07-00	WASHER, PLATE	1	
16	63D-44117-00-00	BRACKET	1	
17	93501-04M02-00	BALL	1	
18	90501-12082-00	SPRING, COMPRESSION	1	
19	648-42715-00-00	BUSHING	1	

CONTINUED ON NEXT FRAME >

CONTROL

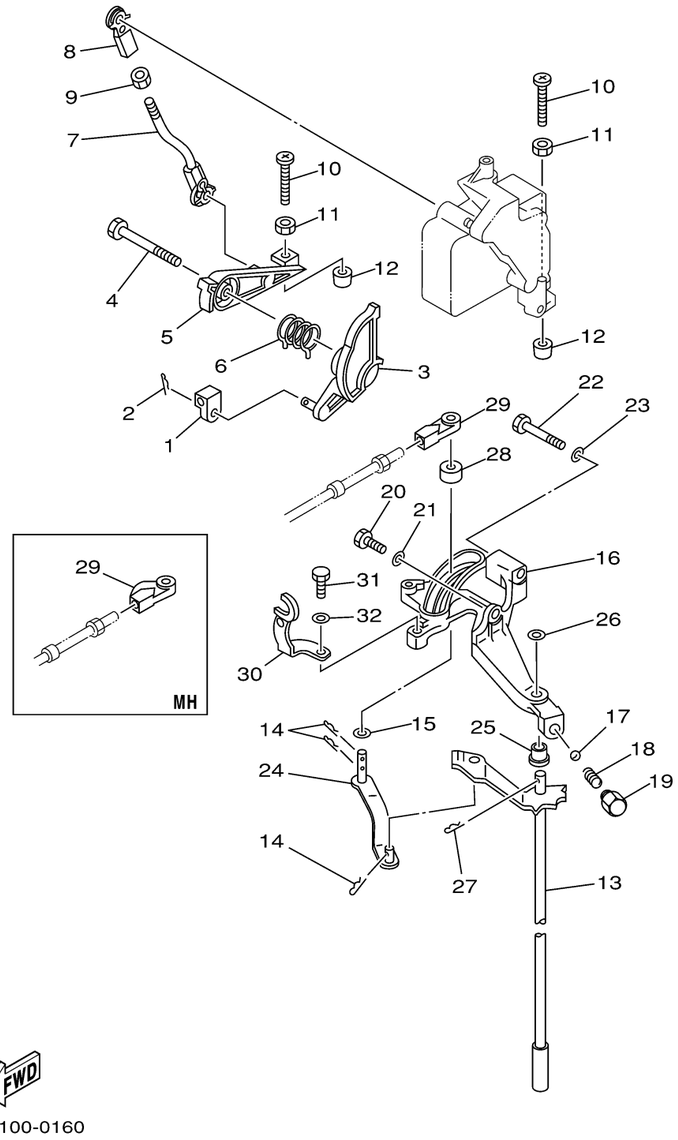

63D0100-0160

Ref No.	Part Number	Description	Qty	Remarks
20	97013-06020-00	BOLT	1	
21	92903-06600-00	WASHER, PLATE	1	
22	97013-06045-00	BOLT	1	
23	92903-06600-00	WASHER, PLATE	1	
24	63D-44121-00-00	LEVER, SHIFT ROD	1	
25	90386-07M58-00	BUSH	1	
26	92990-08200-00	.WASHER, PLAIN	1	
27	91490-20012-00	PIN. COTTER	1	
28	688-44122-00-00	BUSHING, SHIFT ROD LEVER	1	
29	63D-48344-00-00	CABLE END, REMOTE CONTROL	1	UR 40MH (M)
29	663-48344-00-00	.CABLE END, REMOTE CONTROL	1	UR 40TR, 50ER(E)
30	63D-15774-00-00	STAY 4	1	
31	97095-06016-00	BOLT	1	
32	92995-06600-00	WASHER	1	