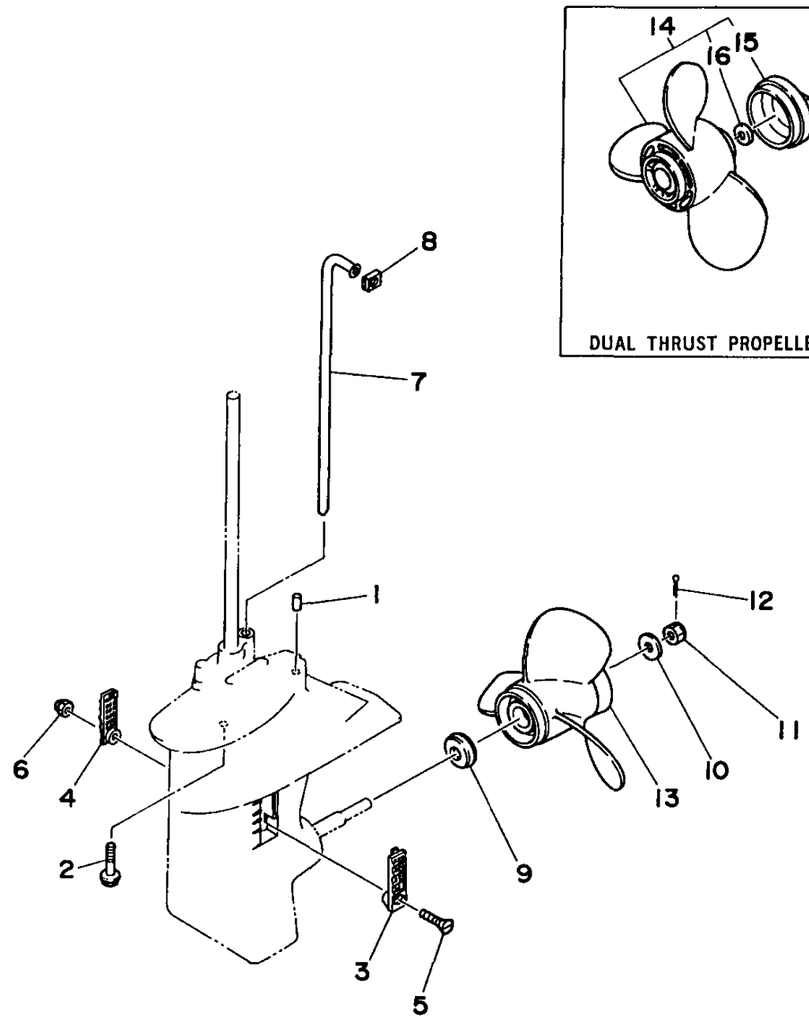

LOWER CASING DRIVE 2

Ref No.	Part Number	Description	Qty	Remarks
1	93604-08062-00	PIN, DOWEL	2	
2	95895-06030-00	BOLT, FLANGE	4	
3	6G1-45214-00-00	COVER, WATER INLET 1	1	
4	6G1-45215-00-00	COVER, WATER INLET 2	1	
5	98180-05020-00	SCREW, OVAL HEAD	1	
6	90185-05904-00	NUT, SELF-LOCKING	1	
7	6N0-G4361-10-00	TUBE, WATER	1	UR LONG
7	6N0-G4361-00-00	TUBE, WATER	1	UR SHORT
8	6G1-44365-00-00	DAMPER, WATER SEAL	1	
9	6N0-G5987-00-00	SPACER	1	
10	90201-10M01-00	WASHER, PLATE	1	
11	90171-10M01-00	NUT, CASTLE	1	
12	91490-30020-00	PIN. COTTER	1	
13	6G1-45943-00-EL	PROPELLER (3X8-1/2"X7-1/2"-N)	1	UR
14	6G1-W4592-00-EL	PROP. DUAL THRUST	1	UR DUAL THRUST PROPELLER
14	6G1-W4591-01-EL	PROPELLER (3X9"X7"-N)	1	UR DUAL THRUST PROPELLER
15	6G1-45616-01-00	. .NUT, PROPELLER	1	
16	90201-10M02-00	. WASHER, PLATE	1	