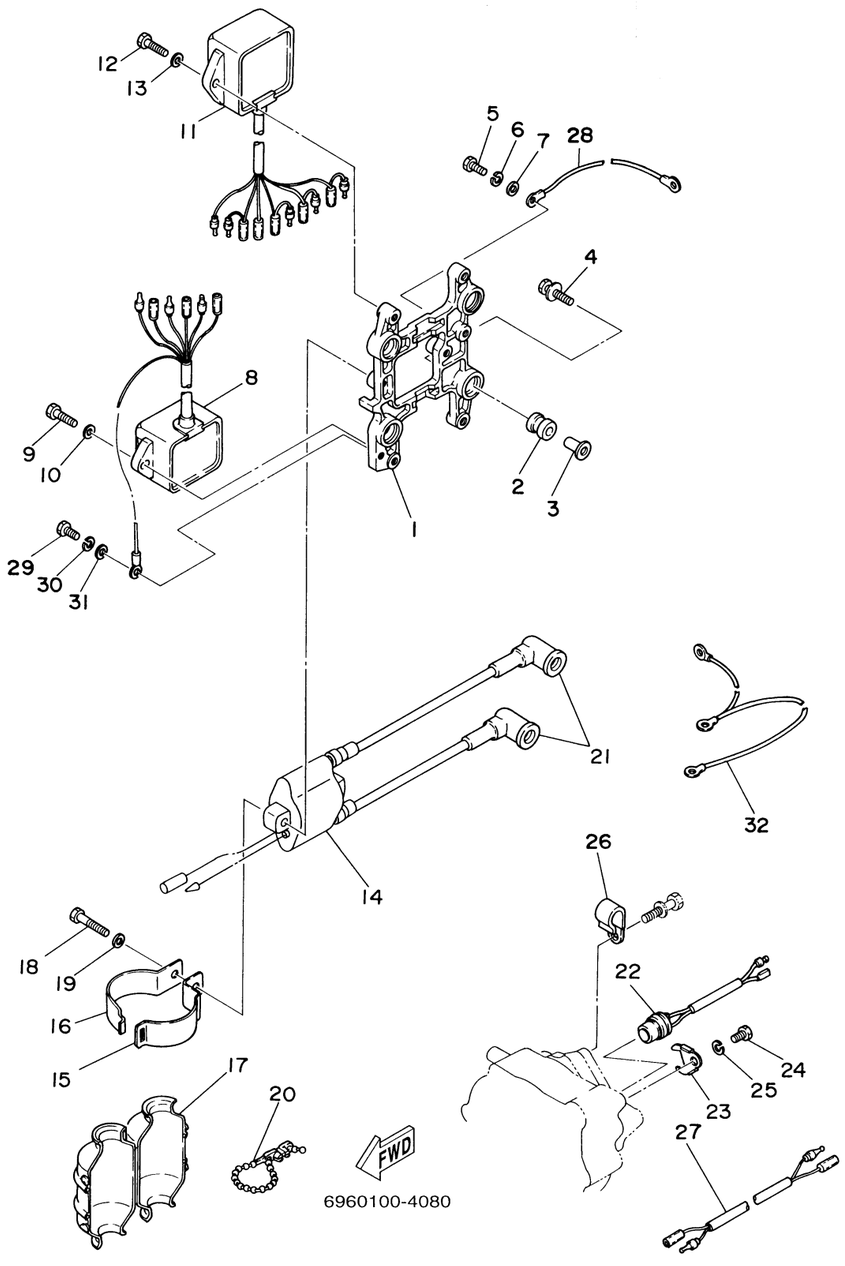

ELECTRICAL 1

Ref No.	Part Number	Description	Qty	Remarks
1	696-85542-00-94	BRACKET	1	
2	6A0-82317-00-00	DAMPER, IGNITION COIL	4	
3	624-42542-00-00	PIPE	4	
4	90119-06M59-00	BOLT, WITH WASHER	4	
5	97013-06012-00	BOLT (661)	1	
6	92903-06100-00	WASHER, SPRING	1	
7	92903-06600-00	.WASHER, PLATE	1	
8	696-85540-11-00	C.D.I. UNIT ASSY	1	
9	97013-06020-00	BOLT	2	
10	92903-06600-00	.WASHER, PLATE	2	
11	696-85590-10-00	CONTROL UNIT ASSY	1	
12	97013-06020-00	BOLT	2	
13	92903-06600-00	.WASHER, PLATE	2	
14	696-85570-11-00	IGNITION COIL ASSY	1	
15	696-81443-00-00	CLAMP, LEAD 1	1	
16	696-81444-00-00	CLAMP, LEAD 2	1	
17	696-81916-00-00	COVER, TERMINAL	1	
18	97095-06030-00	BOLT	2	
19	92995-06600-00	WASHER	2	
20	90464-20M04-00	CLAMP	1	

CONTINUED ON NEXT FRAME >

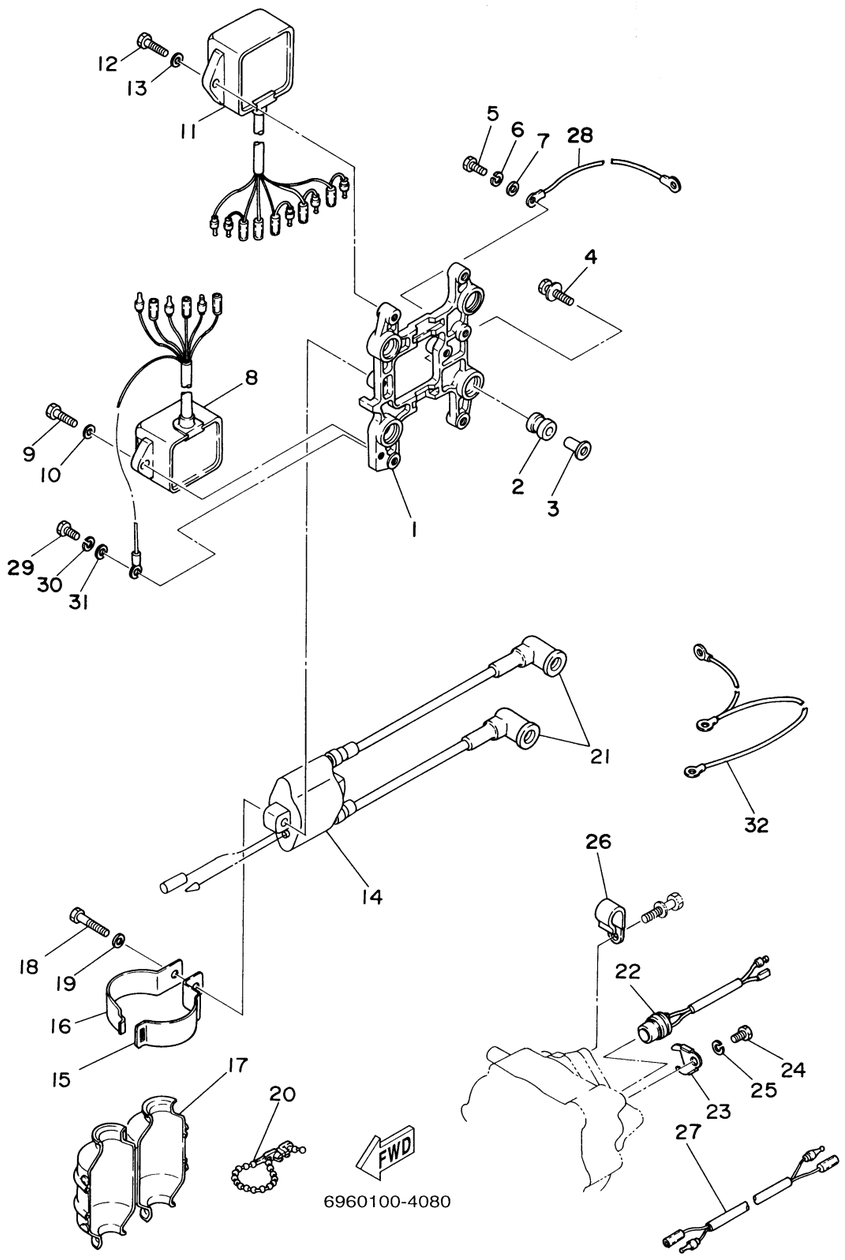

ELECTRICAL 1

Ref No.	Part Number	Description	Qty	Remarks
21	663-82370-01-00	PLUG CAP ASSY	2	
22	688-82560-00-00	THERMO SWITCH ASSY	1	
23	663-82588-00-00	PLATE	1	
24	97013-06010-00	BOLT	1	
25	92903-06100-00	WASHER, SPRING	1	
26	90465-06M86-00	CLAMP	1	
27	696-82531-00-00	WIRE, LEAD	1	
28	662-82519-00-00	WIRE, EARTH LEAD	1	
29	97013-06012-00	BOLT (661)	1	
30	92903-06100-00	WASHER, SPRING	1	
31	92903-06600-00	.WASHER, PLATE	1	
32	697-82519-00-00	WIRE, EARTH LEAD	1	