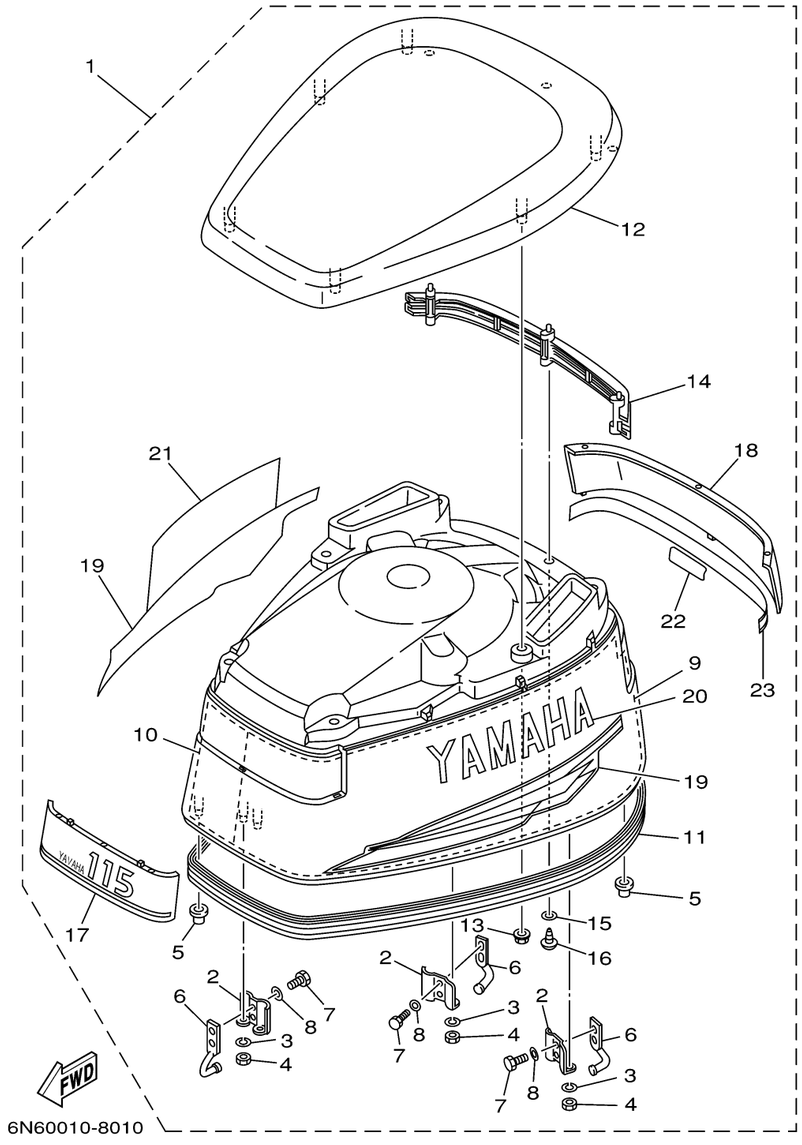

TOP COWLING

Ref No.	Part Number	Description	Qty	Remarks
1	6N6-42610-30-4D	TOP COWLING ASSY	1	UR 115
1	6N7-42610-30-4D	TOP COWLING ASSY	1	UR 130, L130
2	6R3-42647-00-00	. .HOLDER, CLAMP BAND	3	
3	92990-06100-00	. WASHER, SPRING	6	
4	95380-06600-00	. NUT, HEXAGON	6	
5	6R3-42662-00-00	. .DAMPER	3	
6	6R3-42814-00-00	. .HOOK, CLAMP	3	
7	97095-06012-00	. BOLT	6	
8	92995-06600-00	. WASHER	6	
9	6N7-42619-00-00	. .DAMPER, FORM	1	
10	6N7-42627-00-00	. .DAMPER, FORM	1	
11	6R3-42615-01-00	. .SEAL	1	
12	6N7-42613-00-4D	. .MOLDING, AIR DUCT	1	
13	90179-06M24-00	. NUT	6	
14	6N7-42636-00-00	. .LOUVER 2	1	
15	92990-04600-00	. WASHER, PLATE	3	
16	97780-40520-00	. .SCREW, TAPPING	3	
17	6N6-42686-30-00	. .EMBLEM, FRONT	1	UR 115
17	6N7-42686-30-00	. .EMBLEM, FRONT	1	UR 130, L130
18	6N7-42687-30-00	. .EMBLEM, REAR	1	UR 130, L130

CONTINUED ON NEXT FRAME >

TOP COWLING

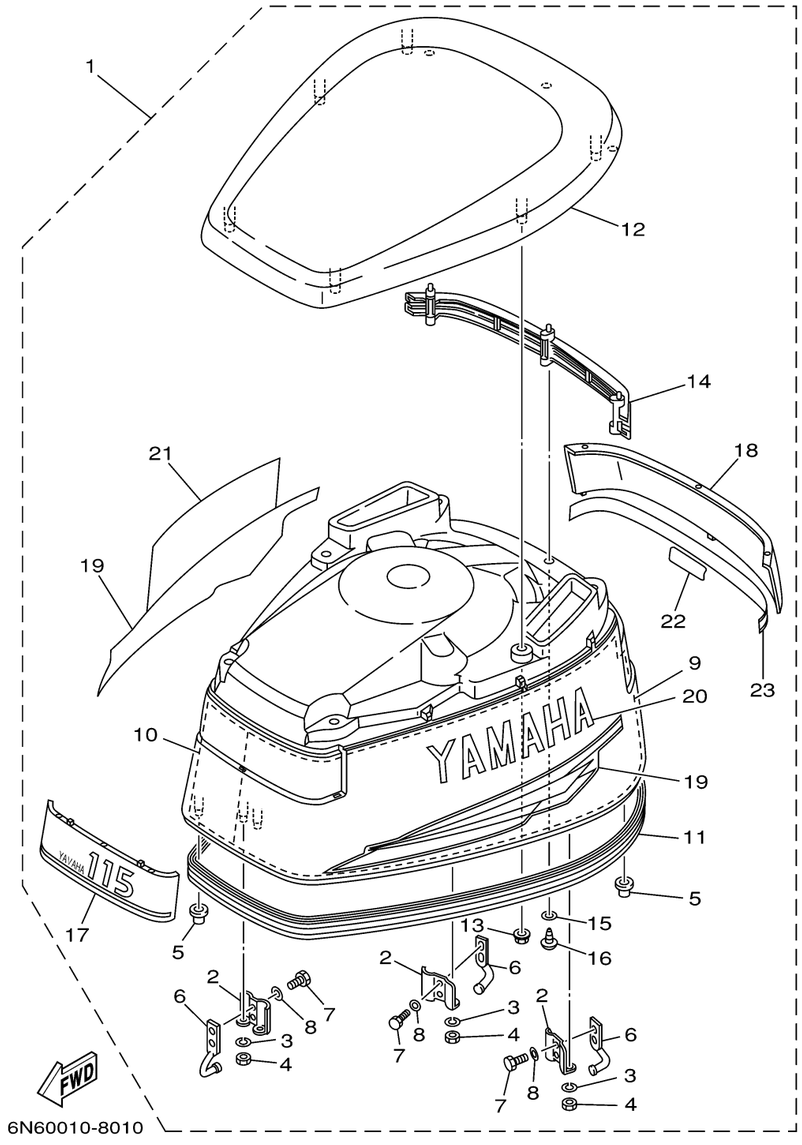

6N60010-8010

Ref No.	Part Number	Description	Qty	Remarks
18	6N6-42687-30-00	. .EMBLEM, REAR	1	UR 115
19	6N7-W0070-30-00	. GRAPHIC SET	1	
20	6N7-42681-30-00	. MARK, COWLING	1	
21	6N7-42682-30-00	. MARK, COWLING	1	
22	6N7-42678-30-00	. GRAPHIC, REAR	1	
23	6N7-4267A-30-00	. GRAPHIC, REAR 2	1	