STEERING FOR 40MH

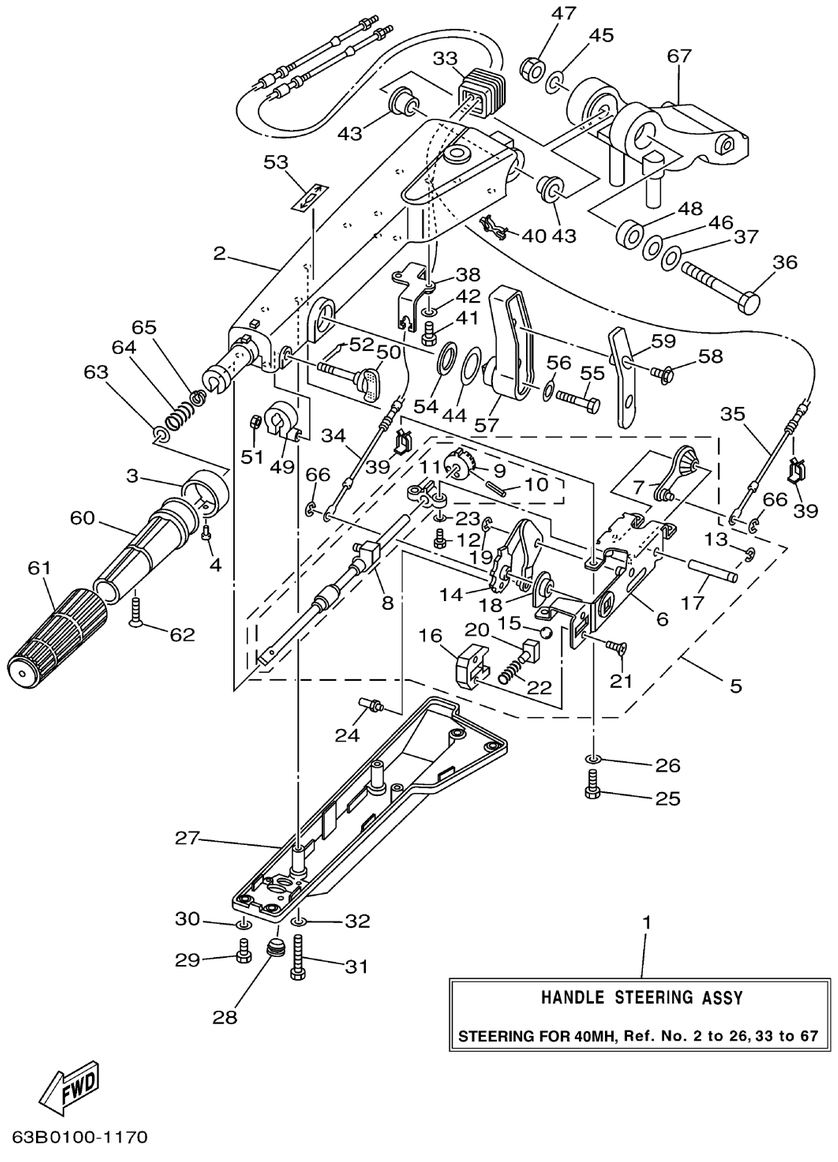

63B0100-1170

Ref No.	Part Number	Description	Qty	Remarks
1	63D-W0084-00-4D	HANDLE STEERING ASSY	1	
2	63D-42111-01-4D	HANDLE, STEERING	1	
3	6K5-42137-00-00	INDICATOR, THROTTLE	1	
4	90269-02M09-00	RIVET	1	
5	63D-44100-11-00	SHIFT LINK ASSY	1	
6	63D-44104-00-00	. PLATE COMP.	1	
7	63D-48261-00-00	. ARM, THROTTLE	1	
8	63D-42115-00-00	. SHAFT, STEERING HANDLE	1	
9	650-42152-00-94	. . GEAR	1	
10	91690-30025-00	. . PIN, SPRING	1	
11	63D-42159-00-00	. . STAY	1	
12	98580-06016-00	. SCREW, PAN HEAD	2	
13	93430-08006-00	. CIRCLIP	1	
14	63D-44113-01-00	. CAM PLATE, HANDLE	1	
15	63D-48236-00-00	. ROLLER, DETENT	1	
16	63D-48119-00-00	. COVER	1	
17	63D-42153-00-00	. SHAFT, THROTTLE CONTROL	1	
18	63D-44132-00-00	. BUSHING	1	
19	63D-48118-00-00	. CLIP, SHIFT LEVER	1	
20	63D-48237-00-00	. ADAPTER	1	

CONTINUED ON NEXT FRAME >

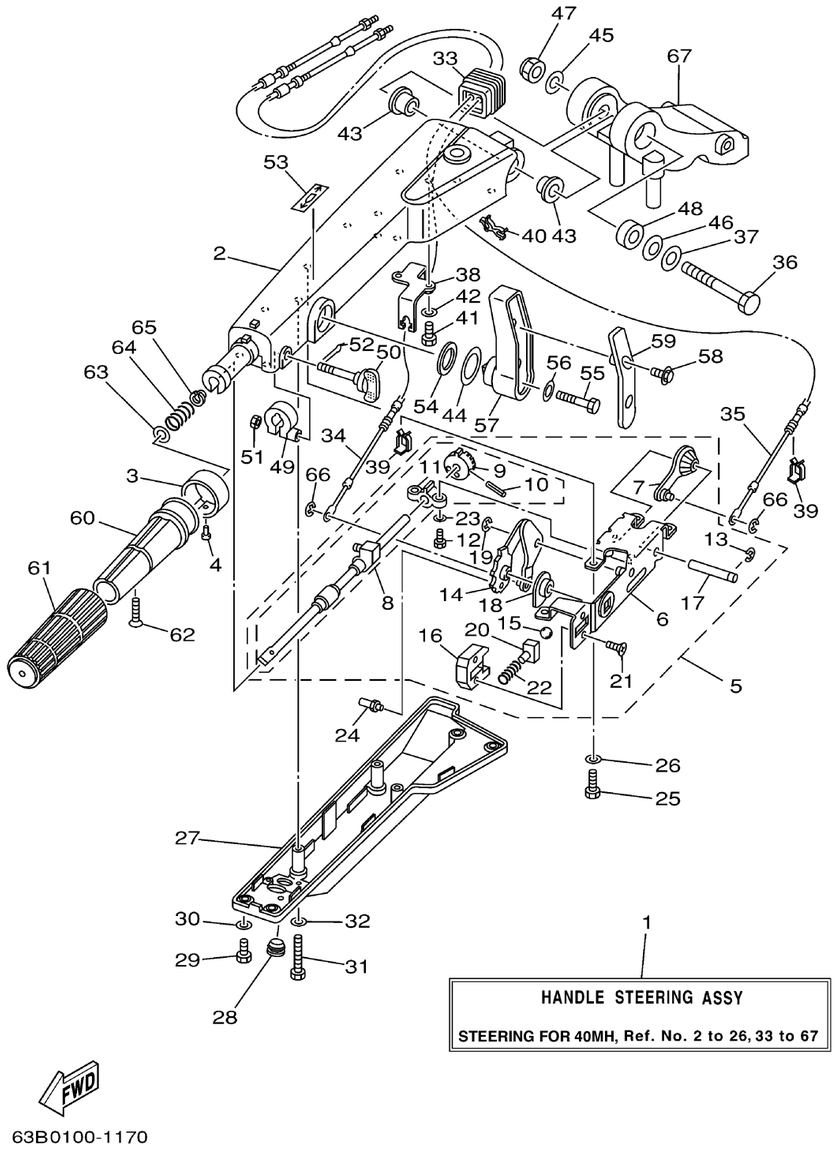

63B0100-1170

STEERING FOR 40MH

Ref No.	Part Number	Description	Qty	Remarks
21	98785-05014-00	. SCREW, FLAT HEAD	2	
22	63D-48238-00-00	. SPRING, DETENT	1	
23	63D-42181-00-00	. WASHER	2	
24	63D-44114-01-00	STOPPER	1	
25	97095-06016-00	BOLT	4	
26	92995-06600-00	WASHER	4	
27	63D-42131-00-00	COVER, HANDLE STEERING	1	
28	90480-14M14-00	GROMMET	1	
29	97885-06016-00	SCREW, PAN HEAD	4	
30	92995-06600-00	WASHER	4	
31	97885-06040-00	SCREW, PAN HEAD	3	
32	92995-06600-00	WASHER	3	
33	63D-42725-00-00	GROMMET	1	
34	63D-48321-01-00	CABLE	1	
35	63D-26301-01-00	THROTTLE CABLE ASSY	1	
36	90101-12M09-00	BOLT	1	
37	92990-12200-00	WASHER, PLAIN	1	
38	63D-48531-00-00	BRACKET, REMOTE CONTROL	1	
39	63D-48538-00-00	CLAMP, CABLE 1	2	
40	90464-09M42-00	CLAMP	1	

CONTINUED ON NEXT FRAME >

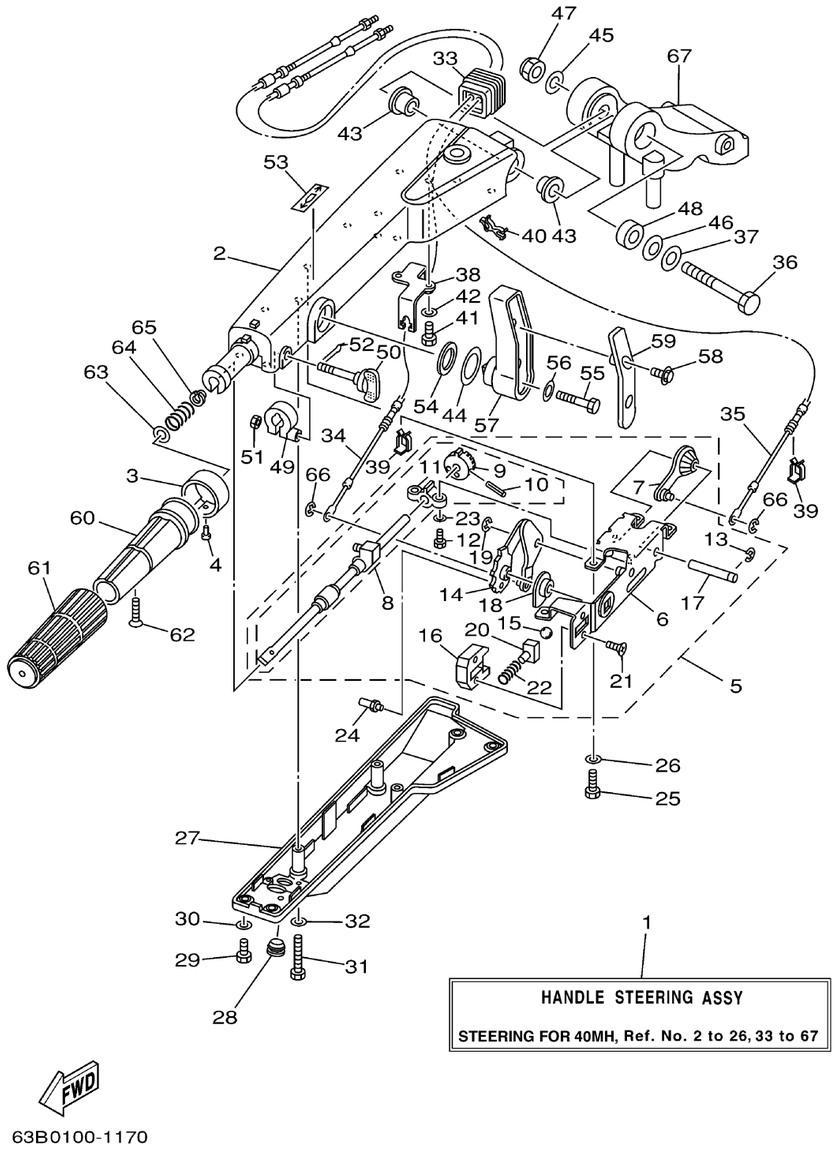

63B0100-1170

STEERING FOR 40MH

Ref No.	Part Number	Description	Qty	Remarks
41	97095-06016-00	BOLT	2	
42	92995-06600-00	WASHER	2	
43	90386-12M93-00	BUSH	2	
44	90386-29M95-00	BUSH	1	
45	92990-12600-00	WASHER, PLATE	1	
46	90206-12M22-00	WASHER, WAVE	1	
47	90185-12M12-00	NUT, SELF-LOCKING	1	
48	90387-12M02-00	COLLAR	1	
49	63D-42126-00-00	FRICTION, STEERING HANDLE GRIP	1	
50	63D-48154-00-00	KNOB, THROTTLE	1	
51	95380-06600-00	NUT, HEXAGON	1	
52	91490-20010-00	PIN. COTTER	1	
53	6G8-44191-00-00	INDICATOR, SHIFT	1	
54	90202-24M53-00	WASHER, PLATE	1	
55	97095-08040-00	BOLT	1	
56	92995-08600-00	WASHER	1	
57	63D-44159-01-00	HANDLE, GEAR SHIFT	1	
58	90159-06M18-00	SCREW, WITH WASHER	2	
59	63D-44173-00-00	LEVER, SHIFT CONTROL	1	
60	664-42119-00-00	GRIP, STEERING HANDLE	1	

CONTINUED ON NEXT FRAME >

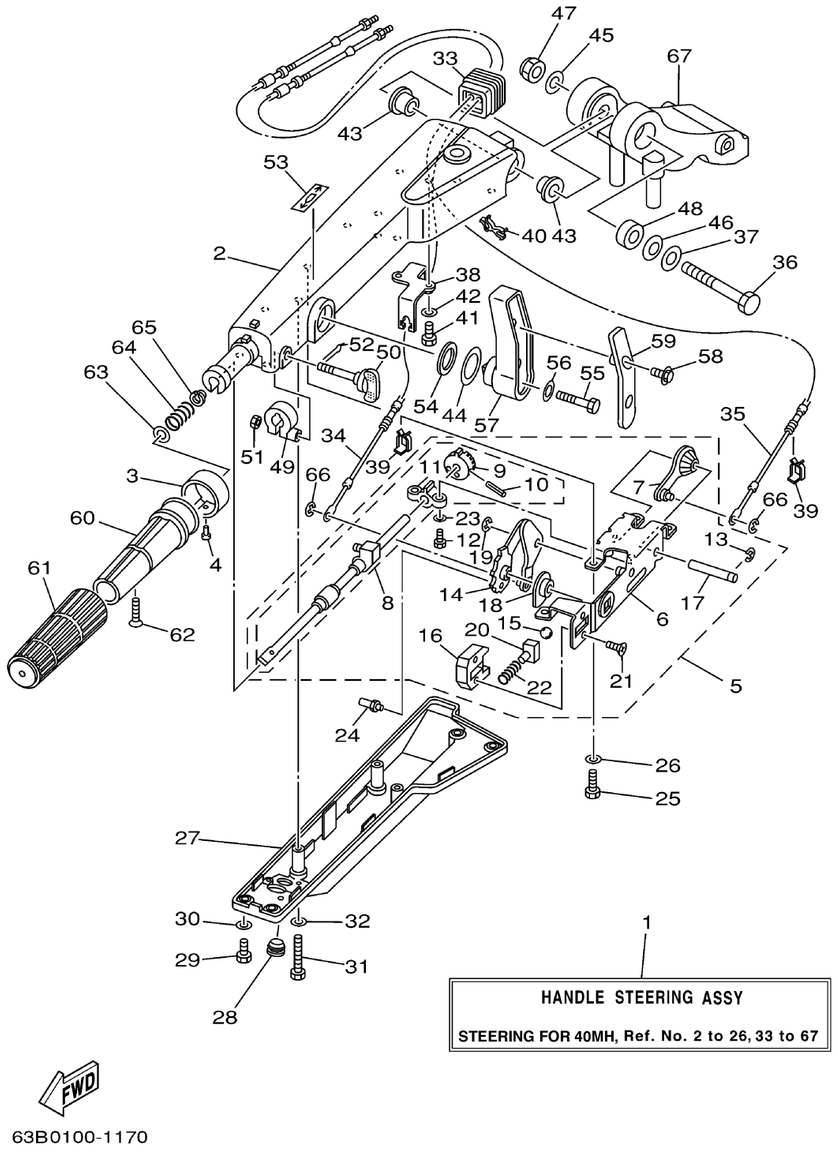

STEERING FOR 40MH

Ref No.	Part Number	Description	Qty	Remarks
61	6G1-42177-00-00	RUBBER, HANDLE	1	
62	90149-05M13-00	SCREW	1	
63	92903-10600-00	WASHER, PLATE	1	
64	90501-23215-00	SPRING, COMPRESSION	1	
65	90386-08032-00	BUSH	1	
66	93430-04M03-00	.CIRCLIP	2	
67	63D-42121-00-4D	BRACKET	1	