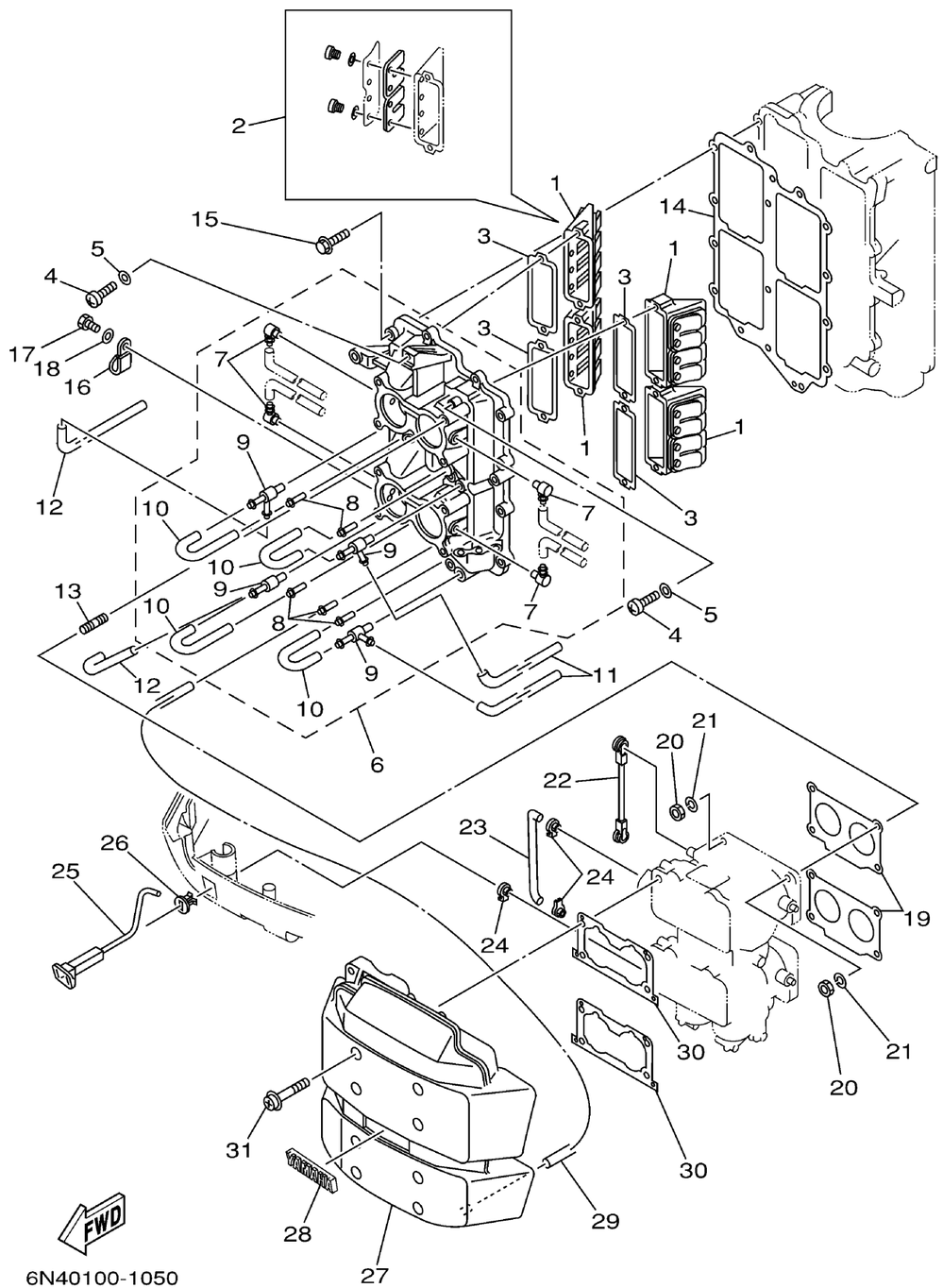

115_130tlra_txra

INTAKE

Ref No.	Part Number	Description	Qty	Remarks
1	6E5-13610-00-00	REED VALVE ASSY	4	
2	6E5-W0004-00-00	. .REED SET	1	
3	6E5-13621-A1-00	.GASKET, VALVE SEAT	4	
4	97880-05025-00	.SCREW, PAN HEAD	8	
5	92990-05600-00	WASHER, PLATE	8	
6	6E5-13641-11-1S	MANIFOLD 1	1	
7	6E5-13552-00-00	. NOZZLE	4	
8	624-14485-00-00	. .PIPE, JOINT	5	
9	6E5-11370-00-00	. .CHECK VALVE ASSY	4	
10	90445-07M28-00	. .HOSE (L70)	4	
11	90445-07M24-00	HOSE (L240)	2	
12	90445-07M46-00	HOSE (L360)	2	
13	90116-06M30-00	BOLT, STUD	8	
14	6E5-13645-A1-00	GASKET, MANIFOLD 1	1	
15	90119-06MA3-00	BOLT, WITH WASHER	12	
16	90465-06M86-00	CLAMP	1	
17	97095-06012-00	BOLT	1	
18	92995-06600-00	WASHER	1	
19	6E5-14198-A2-00	.GASKET	2	
20	95380-06600-00	NUT, HEXAGON	8	

CONTINUED ON NEXT FRAME >

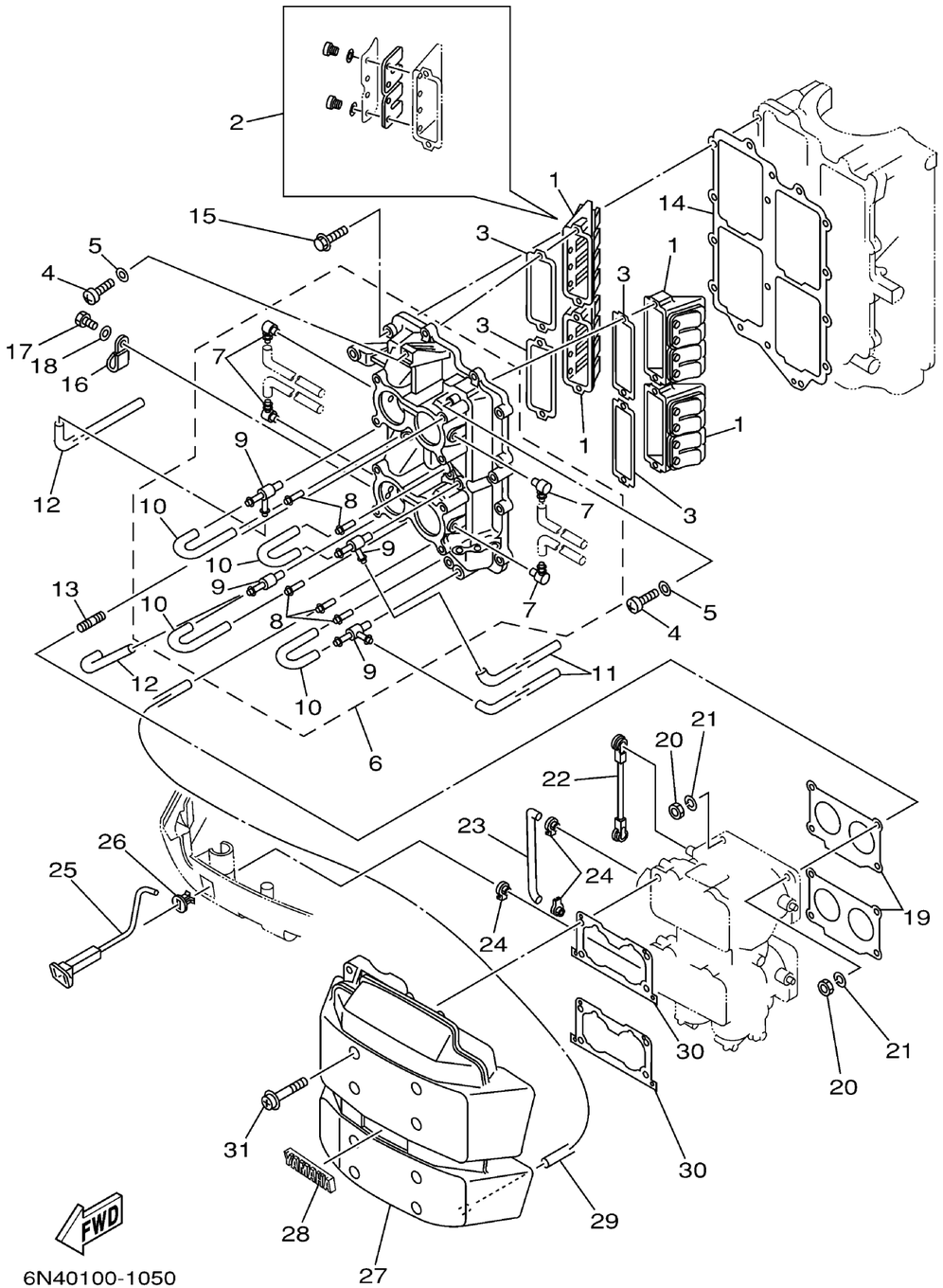

115_130tlra_txra

INTAKE

Ref No.	Part Number	Description	Qty	Remarks
21	92995-06100-00	WASHER, SPRING	8	
22	6E5-41217-01-00	ROD, ACCEL. LEVER	1	
23	6E5-41256-01-00	ROD, CHOKE 1	1	
24	661-41262-02-00	JOINT, CHOKE LEVER	3	
25	6N7-41271-00-00	KNOB, CHOKE	1	
26	689-41273-00-00	GROMMET	1	
27	6N7-14440-01-00	SILENCER ASSY, INTAKE	1	
28	6E5-1441K-00-00	EMBLEM	1	
29	90445-07258-00	HOSE (L200)	1	
30	6K7-14483-00-00	GASKET	2	
31	90159-06M14-00	SCREW, WITH WASHER	8	