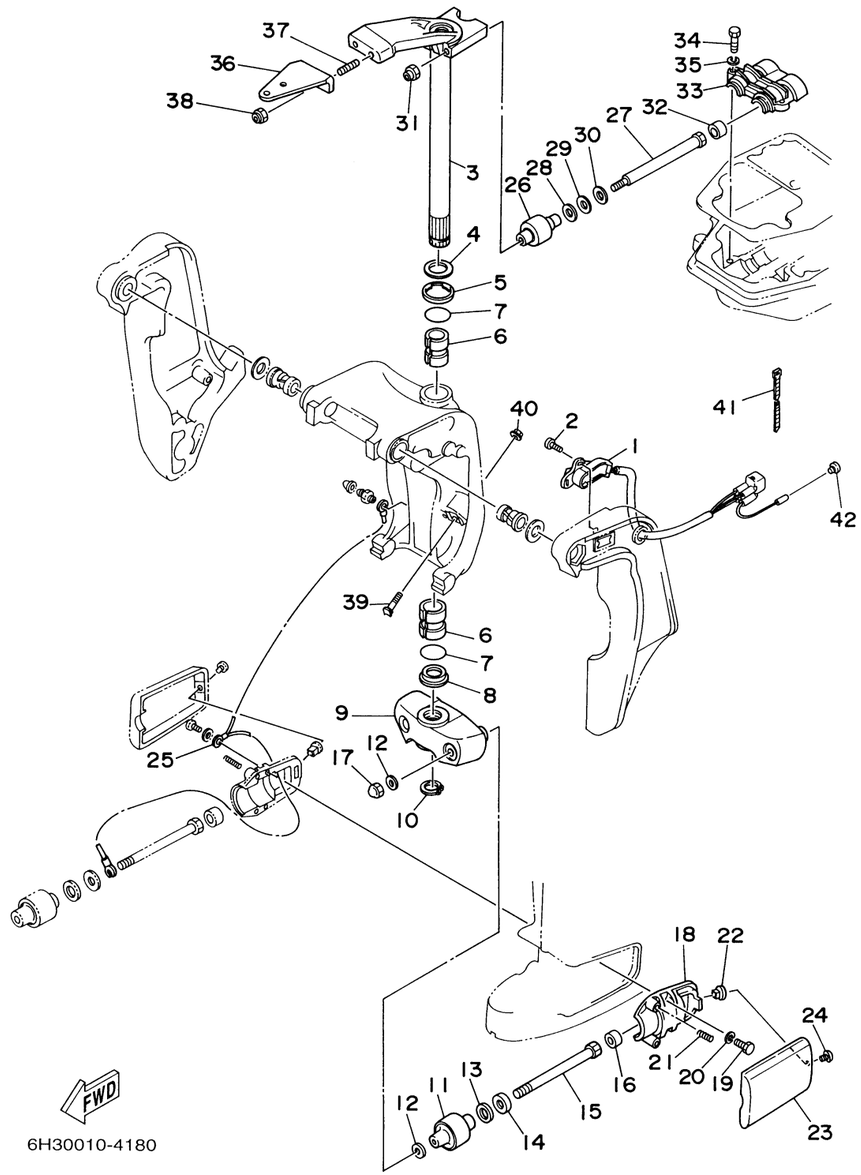

BRACKET 2

Ref No.	Part Number	Description	Qty	Remarks
1	6H1-83672-12-00	TRIM SENDER	1	
2	97885-06016-00	SCREW, PAN HEAD	2	
3	6H3-42510-12-4D	STEERING BRACKET ASSY	1	
4	90201-30M00-00	WASHER, PLATE	1	
5	90386-30M78-00	BUSH	1	
6	90386-30M77-00	BUSH	2	
7	93210-29M94-00	O-RING	2	
8	90386-30M60-00	BUSH	1	
9	6H3-44551-01-4D	HOUSING, LOWER MOUNT RUBBER	1	
10	93410-28M06-00	CIRCLIP	1	
11	687-44555-00-94	MOUNT DAMPER, LOWER SIDE	2	
12	90201-12M16-00	WASHER, PLATE	4	
13	90202-25M04-00	WASHER, PLATE	2	
14	90201-13M19-00	WASHER, PLATE	2	
15	90109-12M21-00	BOLT	2	
16	663-44575-00-00	DAMPER, LOWER MOUNT RUBBER	2	
17	95380-12800-00	NUT, CROWN	2	
18	6H3-44552-03-94	HOUSING, LOWER MOUNT RUBBER	2	
19	97075-08025-00	BOLT	4	
20	92995-08100-00	WASHER	4	

CONTINUED ON NEXT FRAME >

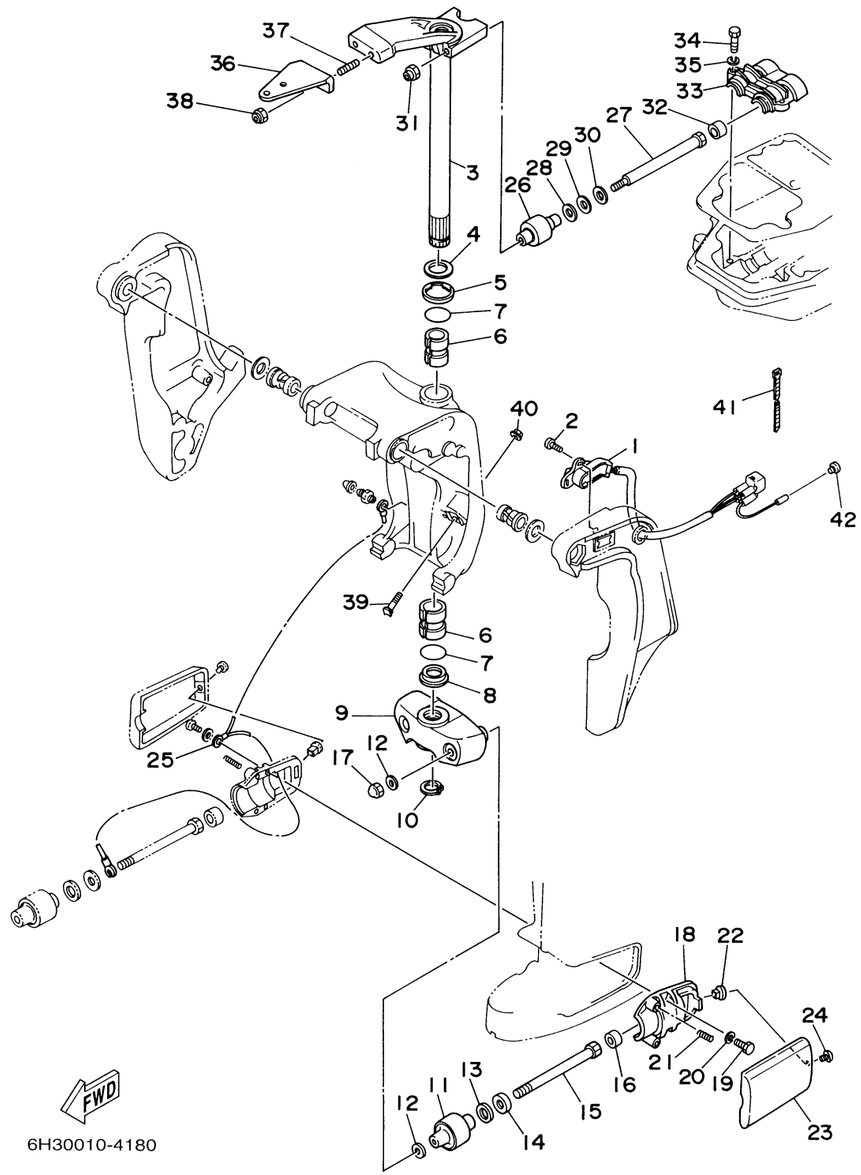

BRACKET 2

Ref No.	Part Number	Description	Qty	Remarks
21	90501-14M08-00	SPRING, COMPRESSION	4	
22	90179-06066-00	NUT	2	
23	6H3-44553-01-4D	COVER, LOWER MOUNT	2	
24	97885-06016-00	SCREW, PAN HEAD	2	
25	688-82127-02-00	WIRE, LEAD 2	1	
26	688-44514-00-94	MOUNT DAMPER, UPPER SIDE	2	
27	90101-10M49-00	BOLT	2	
28	90201-20M21-00	WASHER, PLATE	2	
29	90202-20M06-00	WASHER, PLATE	2	
30	90201-11M22-00	WASHER, PLATE	2	
31	90185-10051-00	NUT, SELF-LOCKING	2	
32	663-44575-00-00	DAMPER, LOWER MOUNT RUBBER	2	
33	688-44511-00-94	COVER, UPPER MOUNT	1	
34	97075-08035-00	BOLT	3	
35	92995-08100-00	WASHER	3	
36	6H3-48511-51-4D	HOOK, STEERING	1	STEERING GUIDE TYPE
37	90116-10175-00	BOLT, STUD	2	UR 70TR
37	90116-10M28-00	BOLT, STUD	2	UR 60TR
38	90185-10051-00	NUT, SELF-LOCKING	2	
39	6H1-43376-00-00	BOLT, THRUST RECEIVER	2	

CONTINUED ON NEXT FRAME >

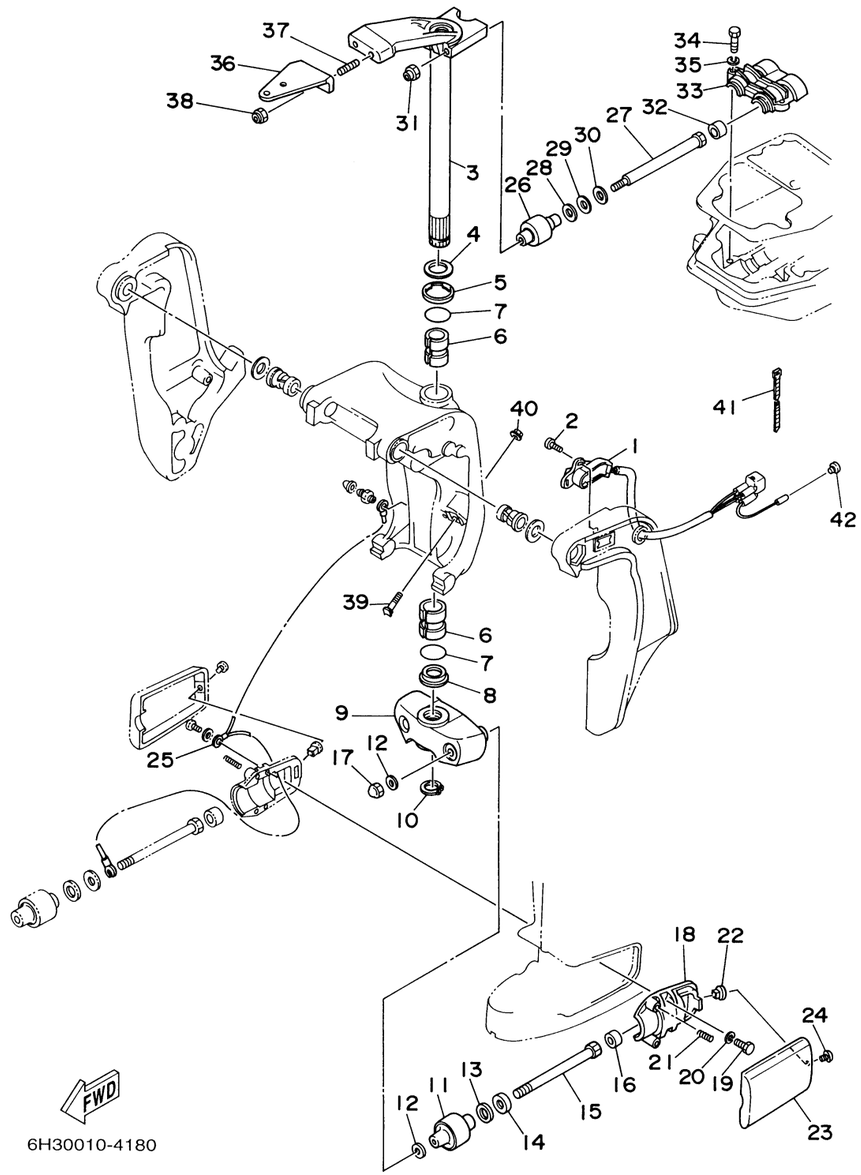

BRACKET 2

Ref No.	Part Number	Description	Qty	Remarks
40	90185-08057-00	.NUT, SELF-LOCKING	2	
41	90465-11M10-00	.CLAMP	3	
42	703-82119-00-00	COVER, LEAD WIRE	1	