CYLINDER CRANKCASE 2

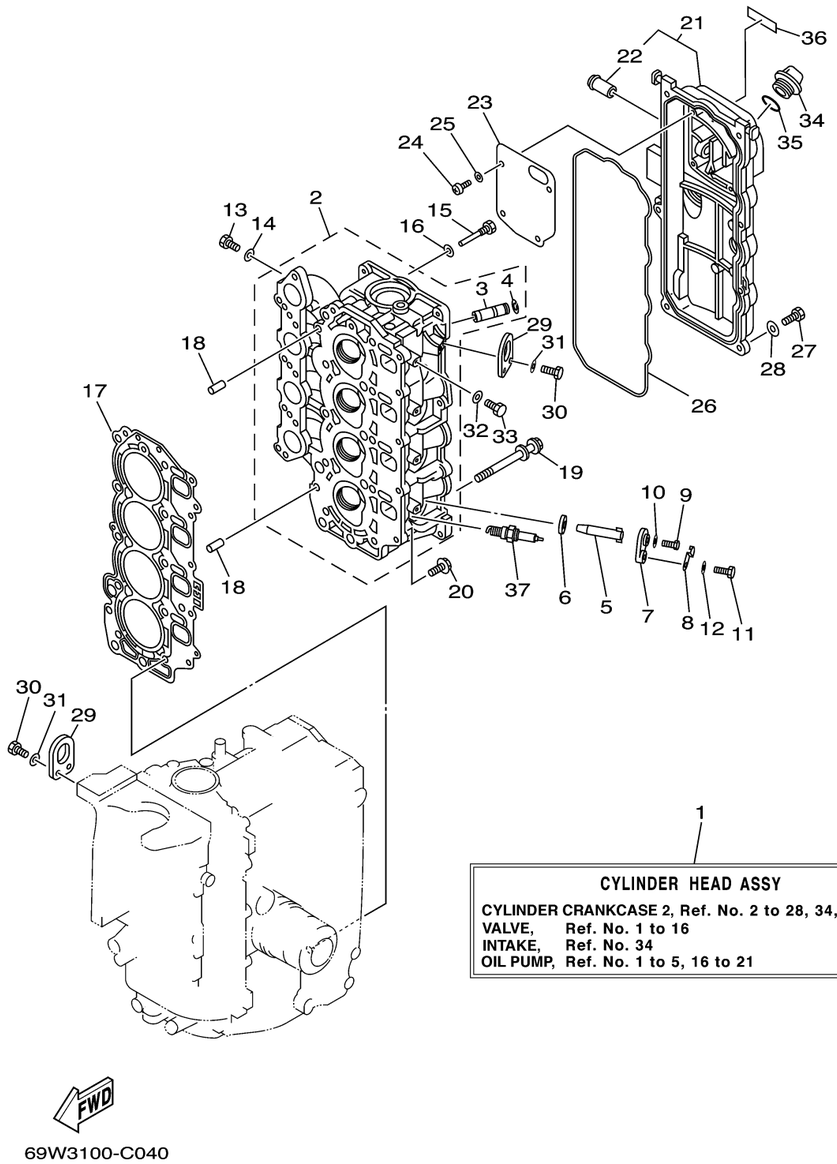

69W3100-C040

Ref No.	Part Number	Description	Qty	Remarks
1	69W-W009A-00-1S	CYLINDER HEAD COMPLETE	1	
2	69W-11111-00-1S	HEAD, CYLINDER 1	1	
3	62Y-11133-30-00	. .GUIDE, VALVE 1	8	
4	93450-09M01-00	. .CIRCLIP	8	
5	62Y-11325-00-00	ANODE	4	
6	66M-11328-00-00	GROMMET, ANODE	4	
7	66M-11327-00-94	COVER, ANODE	4	
8	66M-12535-00-00	PLATE	4	
9	97095-05012-00	.BOLT	4	
10	92995-05600-00	.WASHER	4	
11	97095-06020-00	BOLT	4	
12	92995-06600-00	WASHER	4	
13	97095-06010-00	BOLT	4	
14	90430-06014-00	GASKET	4	
15	90109-06M65-00	BOLT	1	
16	90430-06014-00	GASKET	1	
17	69W-11181-00-00	.GASKET, CYLINDER HEAD 1	1	
18	99530-08012-00	PIN, DOWEL	2	
19	90119-09M00-00	BOLT, WITH WASHER	10	
20	90119-06MA3-00	BOLT, WITH WASHER	5	

CONTINUED ON NEXT FRAME >

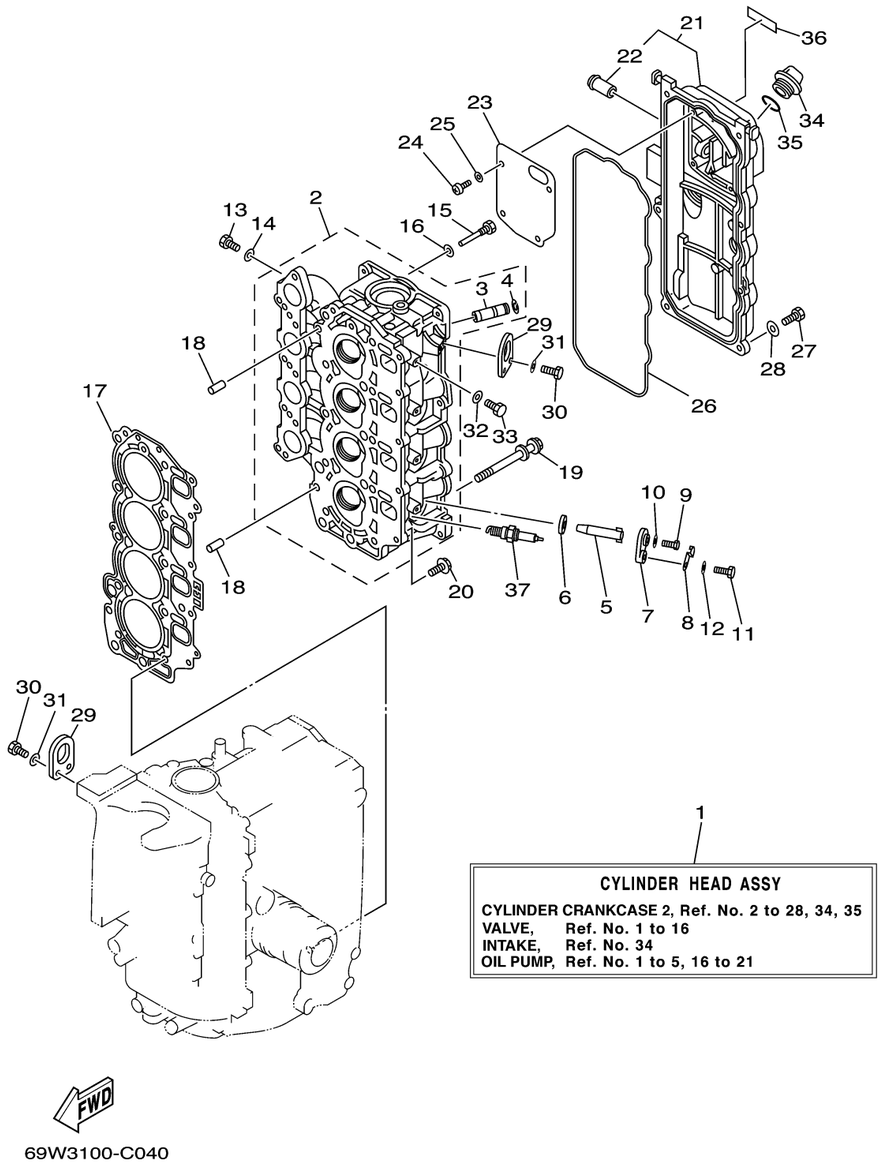

69W3100-C040

CYLINDER CRANKCASE 2

Ref No.	Part Number	Description	Qty	Remarks
21	62Y-11191-01-1S	COVER, CYLINDER HEAD 1	1	
22	62Y-14485-00-00	. .PIPE, JOINT	1	
23	62Y-11168-00-00	COVER, BREATHER	1	
24	98507-04010-00	SCREW, PAN HEAD	4	
25	92907-04600-00	.WASHER	4	
26	62Y-11356-00-00	.SEAL, CYLINDER 2	1	
27	97095-06020-00	BOLT	7	
28	92995-06600-00	WASHER	7	
29	62Y-11119-00-00	HANGER, ENGINE	2	
30	97095-06020-00	BOLT	4	
31	92995-06600-00	WASHER	4	
32	90430-08143-00	GASKET	4	
33	97095-08014-00	BOLT	4	
34	6G8-15363-00-00	PLUG, OIL	1	
35	93210-24M79-00	.O-RING	1	
36	62Y-12138-40-00	MARK, CAUTION	1	
37	94701-00406-00	PLUG, SPARK (NGK DPR5EA-9)	4	