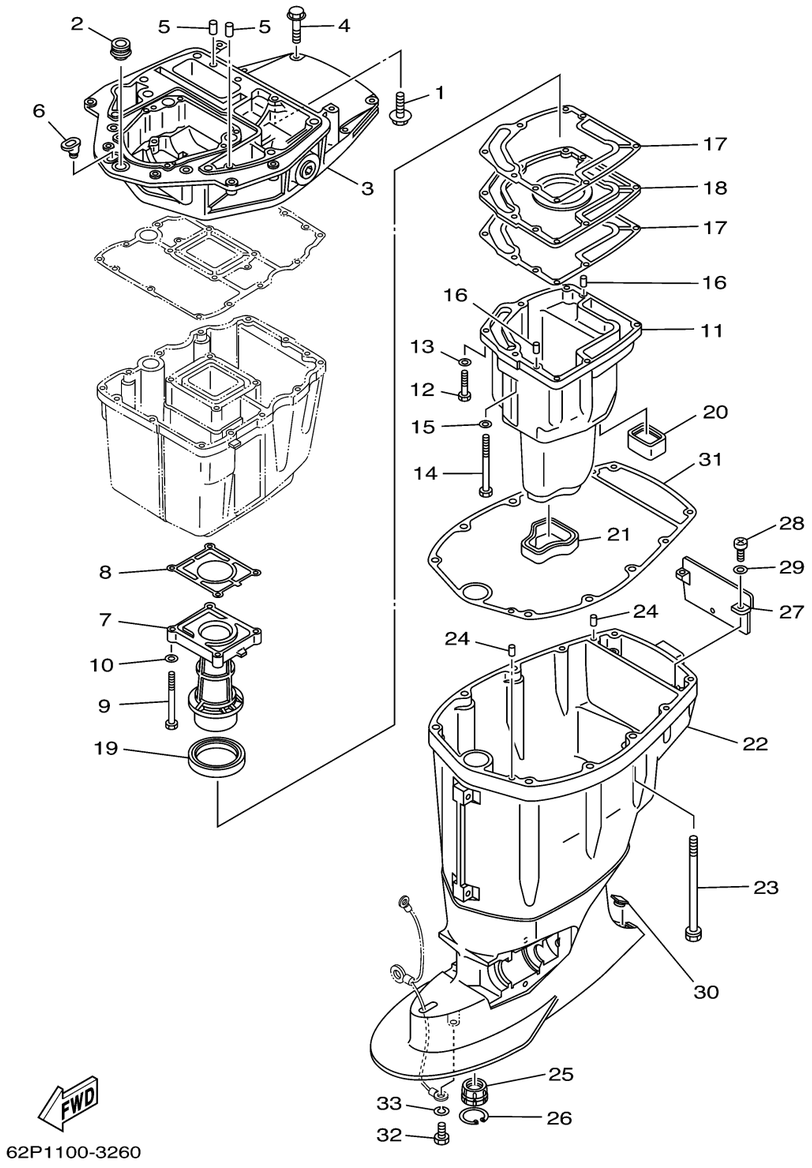

62P1100-3260

UPPER CASING

Ref No.	Part Number	Description	Qty	Remarks
1	90119-08M58-00	BOLT, WITH WASHER	2	
2	67F-42724-00-00	GROMMET	1	
3	67F-41137-02-94	GUIDE, EXHAUST	1	
4	97575-08540-00	BOLT, WITH WASHER	4	
5	93608-16M16-00	PIN, DOWEL	2	
6	6G1-42727-00-00	GROMMET	1	
7	67F-41131-01-5B	MANIFOLD, EXT. 1	1	
8	67F-41133-A1-00	.GASKET, EXHAUST MANIFOLD 1	1	
9	97075-06070-00	BOLT	4	
10	92995-06600-00	WASHER	4	
11	67F-14711-00-5B	MUFFLER 1	1	
12	97075-06030-00	BOLT	6	
13	92995-06600-00	WASHER	6	
14	97075-06050-00	BOLT	1	
15	92995-06600-00	WASHER	1	
16	93606-19M23-00	PIN, DOWEL	2	
17	67F-41134-A0-00	.GASKET, EXHAUST MANIFOLD	2	
18	67F-45181-00-5B	PLATE	1	
19	67F-41138-00-00	.SEAL, EXT. 1	1	
20	67F-45127-00-00	.SEAL	1	

CONTINUED ON NEXT FRAME >

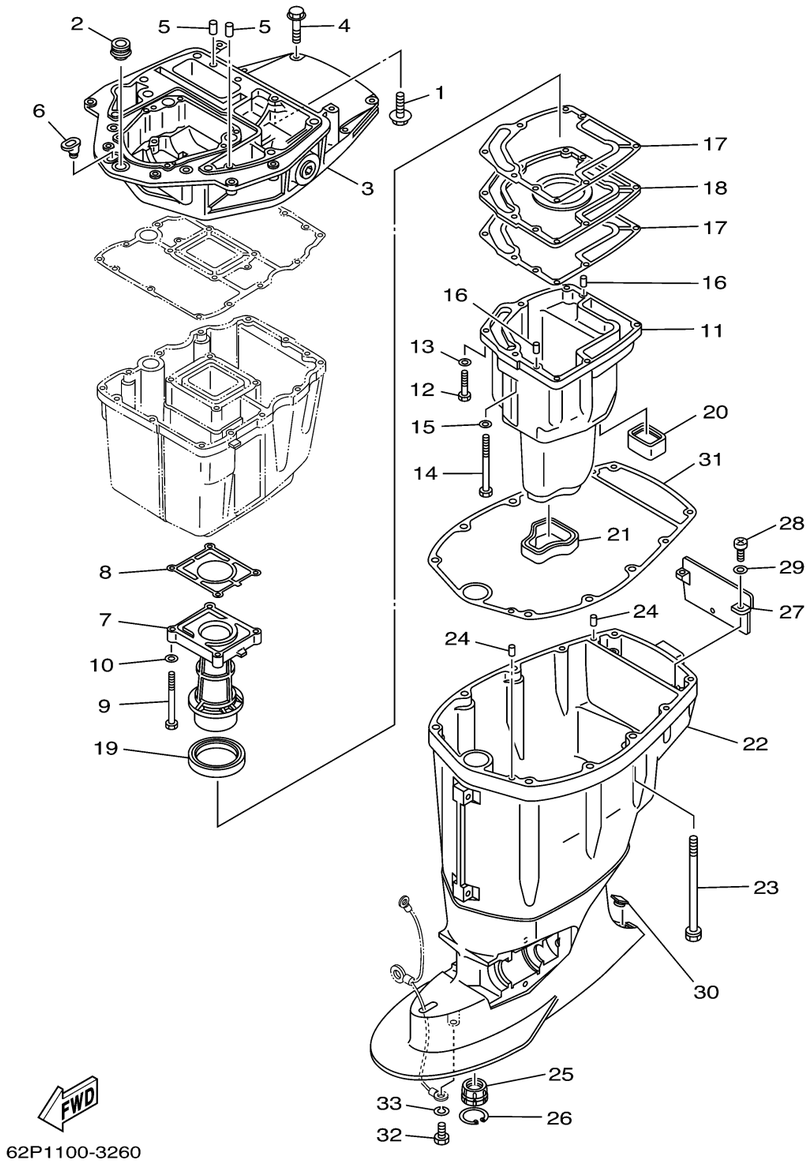

62P1100-3260

UPPER CASING

Ref No.	Part Number	Description	Qty	Remarks
21	67F-45123-00-00	.GASKET, MUFFLER	1	
22	67F-45111-10-4D	CASING, UPPER	1	
23	90119-10M08-00	BOLT, WITH WASHER	6	
24	93608-16M16-00	PIN, DOWEL	2	
25	67F-45318-00-00	BUSHING, DRIVE SHAFT	1	
26	93420-36M01-00	CIRCLIP	1	
27	67F-45151-00-00	COVER, UPPER CASING	1	
28	97880-06016-00	SCREW, PAN HEAD	2	
29	92990-06600-00	.WASHER, PLATE	2	
30	67F-45155-00-00	CAP	1	
31	67F-45113-00-00	.GASKET, UPPER CASING	1	
32	97095-08016-00	BOLT	1	
33	92995-08100-00	WASHER	1	