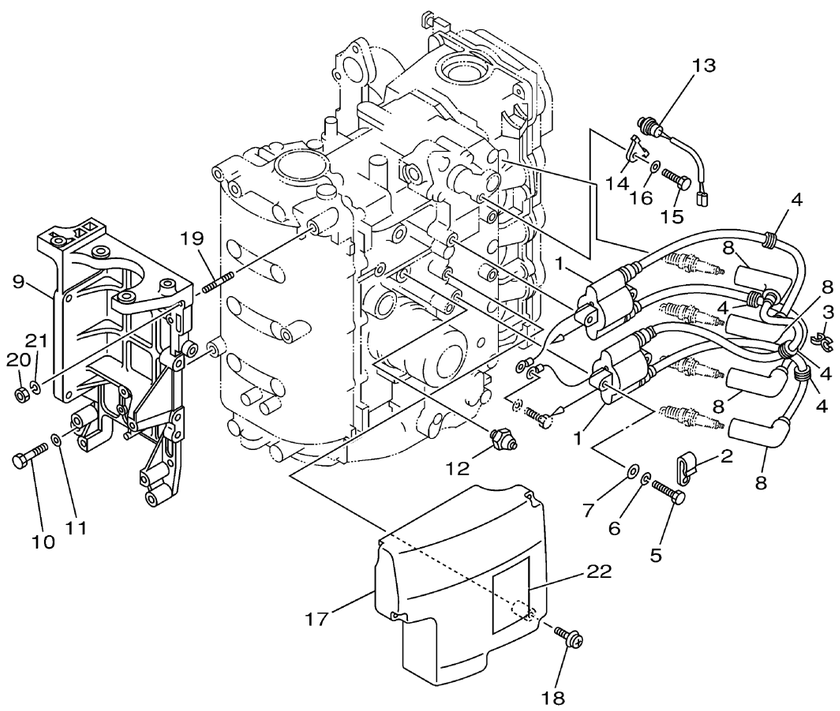

62Y1100-2120

ELECTRICAL 1

Ref No.	Part Number	Description	Qty	Remarks
1	62Y-85570-00-00	IGNITION COIL ASSY	2	
2	90465-06M90-00	CLAMP	2	
3	90464-07M41-00	CLAMP	1	
4	90480-25161-00	GROMMET	4	
5	97095-06030-00	BOLT	4	
6	92995-06100-00	WASHER, SPRING	4	
7	92995-06600-00	WASHER	4	
8	6G8-82370-30-00	PLUG CAP ASSY	4	
9	62Y-81822-01-94	BRACKET, STARTING MOTOR	1	
10	97095-08035-00	BOLT	3	
11	92995-08600-00	WASHER	3	
12	64J-82504-00-00	OIL PRESSURE SWITCH ASSY	1	
13	62Y-82560-01-00	THERMO SWITCH ASSY	1	
14	6E9-82588-00-00	PLATE	1	
15	97095-06012-00	.BOLT	1	
16	92995-06600-00	WASHER	1	
17	62Y-85599-00-00	COVER	1	
18	90159-06M08-00	SCREW, WITH WASHER	3	
19	90116-08M14-00	BOLT, STUD	1	
20	95380-08600-00	NUT	1	

CONTINUED ON NEXT FRAME >

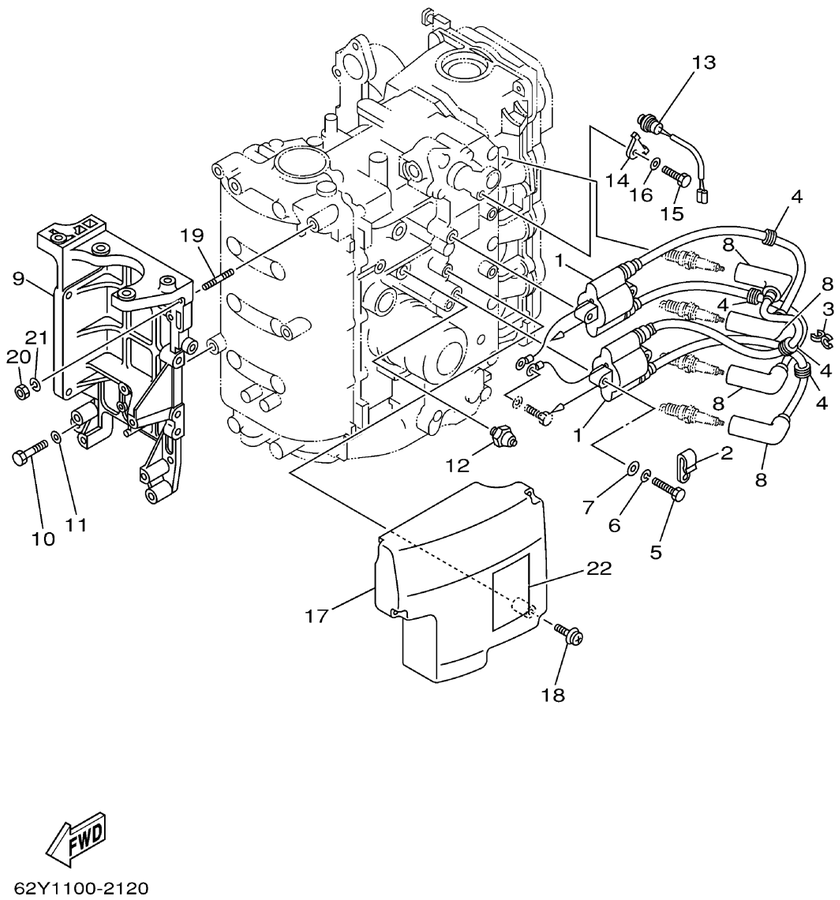

ELECTRICAL 1

Ref No.	Part Number	Description	Qty	Remarks
21	92990-08100-00	.WASHER, SPRING	1	
22	62Y-83626-00-00	MARK 6	1	