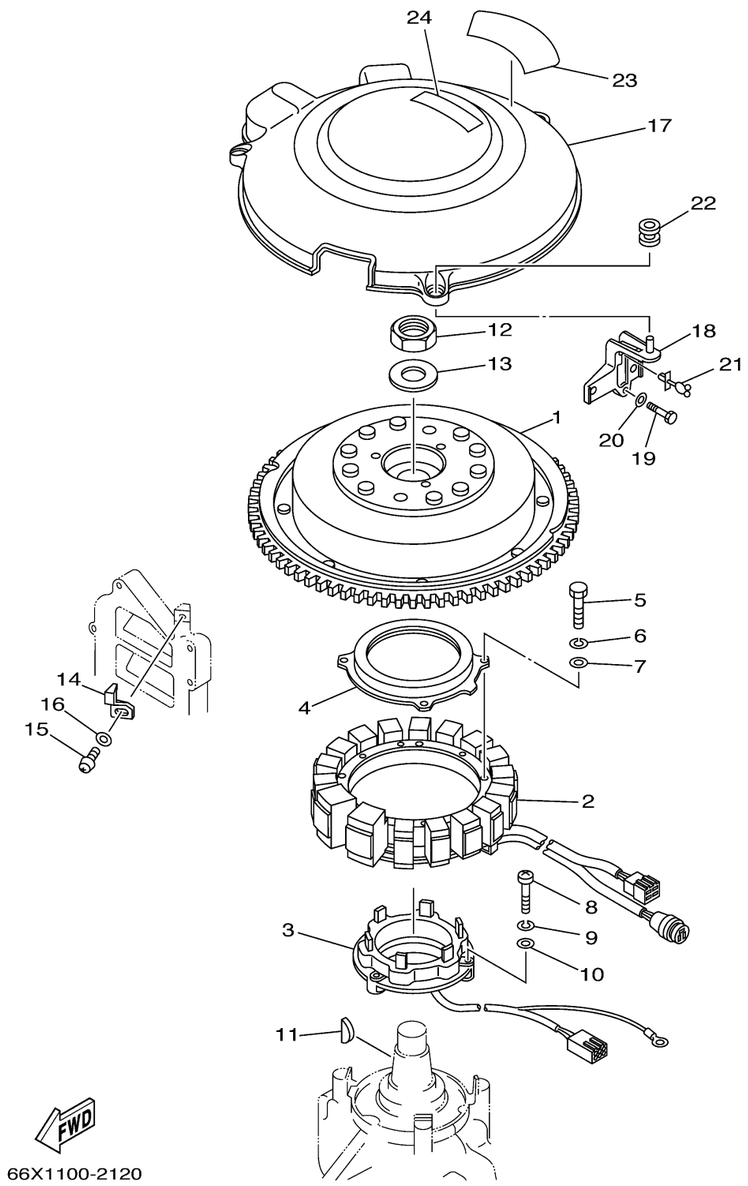

GENERATOR

Ref No.	Part Number	Description	Qty	Remarks
1	61A-85550-01-00	ROTOR ASSY	1	
2	65L-85510-10-00	STATOR ASSY	1	
3	61A-85580-01-00	COIL, PULSER	1	
4	61A-83721-00-00	COVER	1	
5	97014-06035-00	. BOLT, HEXAGON	4	
6	92903-06100-00	WASHER, SPRING	4	
7	92903-06600-00	WASHER, PLATE	4	
8	97885-05030-00	SCREW, PAN HEAD	3	
9	92990-05100-00	WASHER, SPRING	3	
10	92990-05600-00	WASHER, PLATE	3	
11	90280-05015-00	KEY, WOODRUFF	1	
12	90170-24M22-00	NUT	1	
13	90201-25M02-00	WASHER, PLATE	1	
14	6E5-81332-00-00	PLATE, TIMING	1	
15	97985-06210-00	SCREW, WITH WASHER	1	
16	92990-06600-00	.WASHER, PLATE	1	
17	61A-81337-01-00	COVER, FLYWHEEL	1	
18	65L-81338-00-1S	CLAMP, LEAD	1	
19	97013-06025-00	BOLT	1	
20	92903-06600-00	WASHER, PLATE	1	

CONTINUED ON NEXT FRAME >

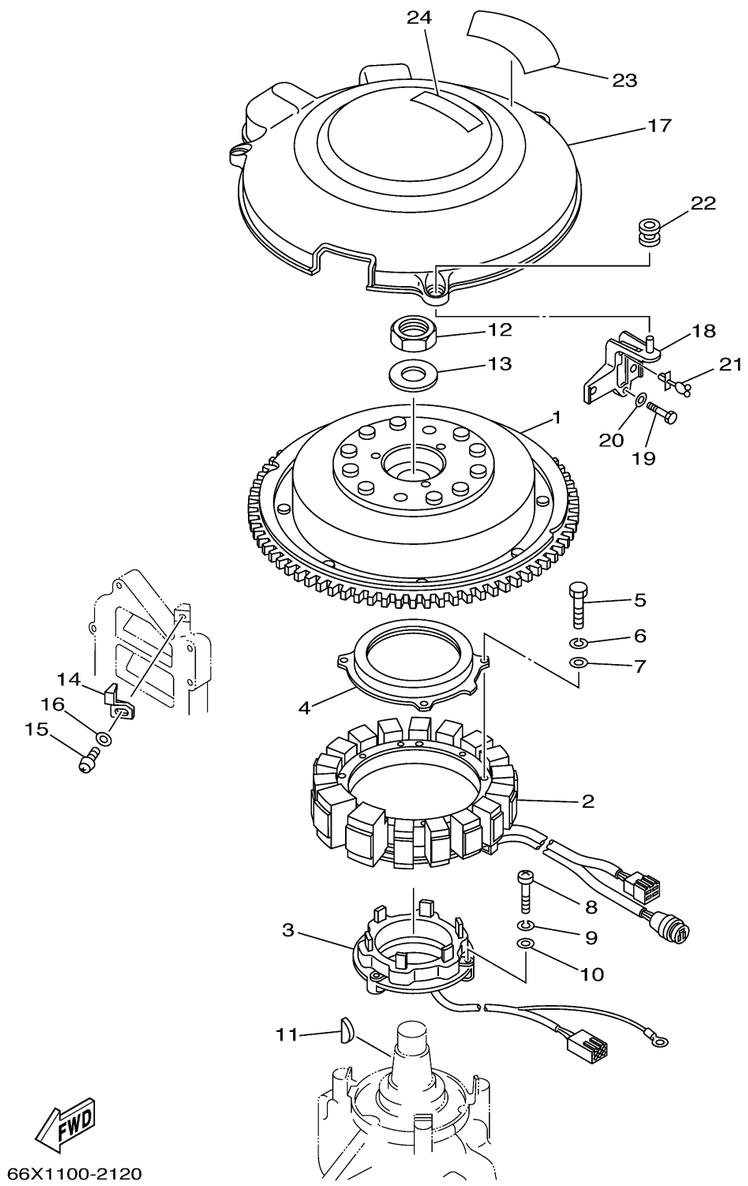

GENERATOR

Ref No.	Part Number	Description	Qty	Remarks
21	90464-18M46-00	CLAMP	1	
22	663-82317-01-00	DAMPER, IGNITION COIL	3	
23	65L-14488-00-00	LABEL, CAUTION	1	
24	6A1-83625-41-00	MARK 5	1	