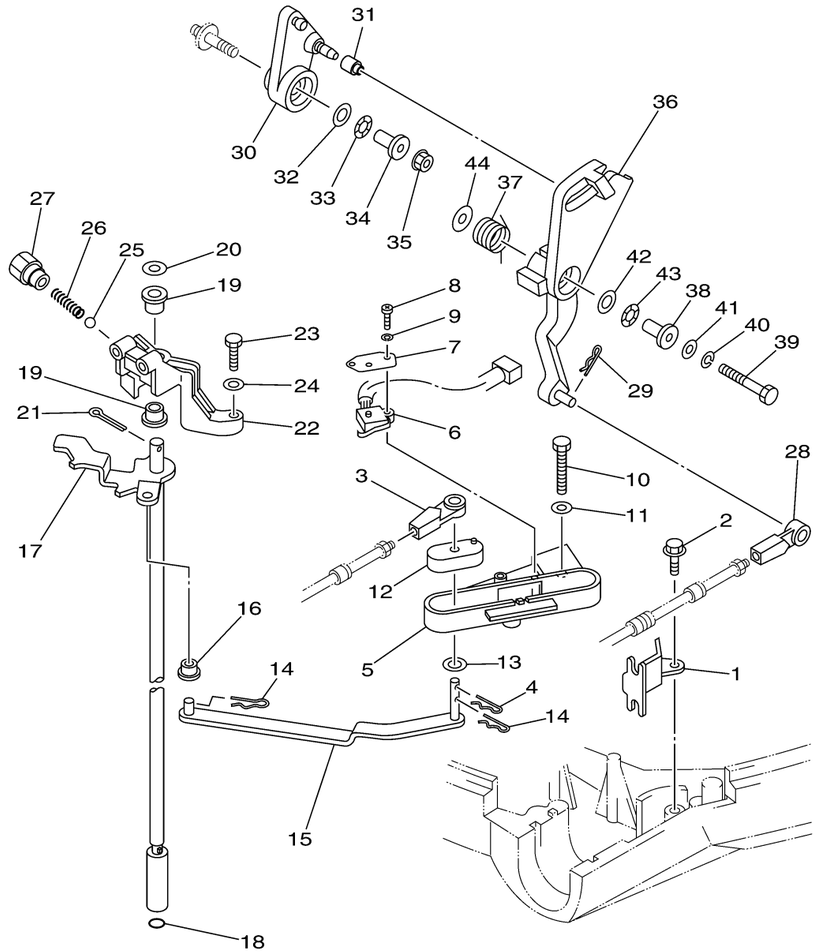

68V3100-C210

CONTROL

Ref No.	Part Number	Description	Qty	Remarks
1	67F-48538-00-00	CLAMP, CABLE 1	1	
2	90109-06M86-00	BOLT	1	
3	663-48344-00-00	.CABLE END, REMOTE CONTROL	1	
4	90468-18008-00	CLIP	1	
5	68V-44117-00-00	BRACKET	1	
6	68F-8259F-00-00	SWITCH ASSY	1	EXCEPT F115TJR
7	61A-82588-01-00	PLATE	1	EXCEPT F115TJR
8	97885-04016-00	SCREW, PAN HEAD	2	EXCEPT F115TJR
9	92995-04100-00	WASHER	2	EXCEPT F115TJR
10	97095-06040-00	.BOLT	2	
11	92995-06600-00	WASHER	2	
12	68V-44122-01-00	BUSHING, SHIFT ROD LEVER	1	
13	90202-07M07-00	WASHER, PLATE	1	
14	90468-18008-00	CLIP	2	
15	68V-44121-00-00	LEVER, SHIFT ROD	1	
16	90386-06M12-00	BUSH	1	
17	68V-44120-10-00	HANDLE GEAR SHIFT ASSY	1	UR L
17	68V-44120-30-00	HANDLE GEAR SHIFT ASSY	1	UR X
18	93210-09165-00	O-RING	1	
19	90386-90M90-00	BUSH	2	

CONTINUED ON NEXT FRAME >

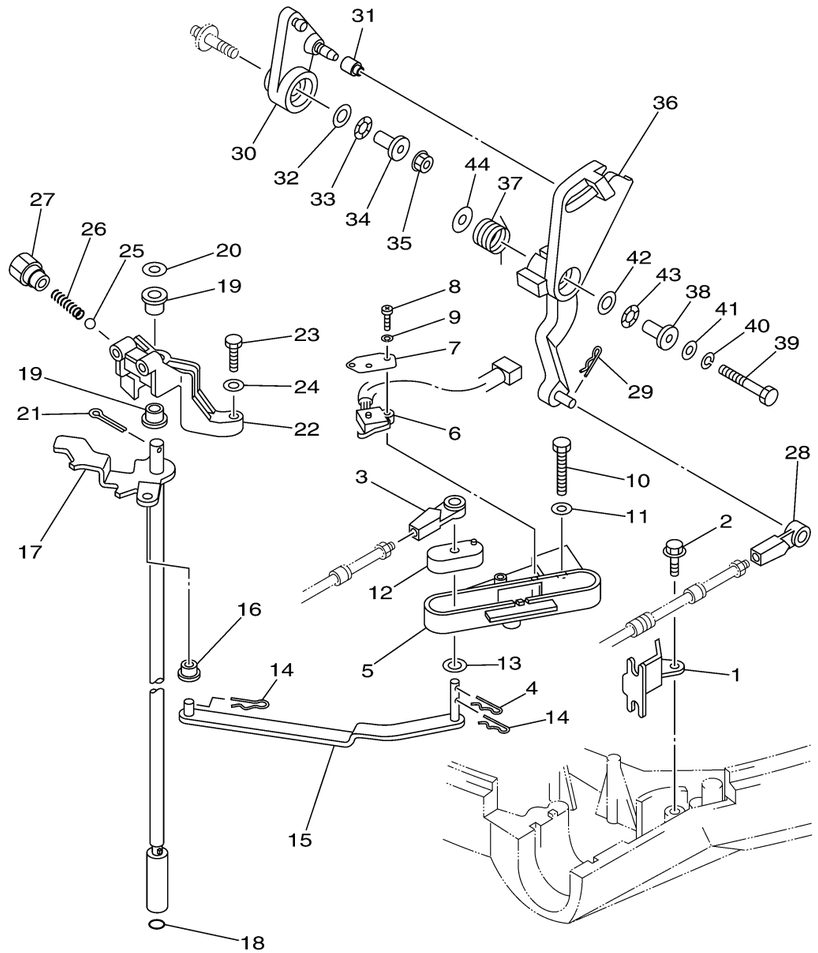

68V3100-C210

CONTROL

Ref No.	Part Number	Description	Qty	Remarks
20	90201-09M02-00	WASHER, PLATE	1	
21	91490-20015-00	.PIN. COTTER	1	
22	68V-44118-00-00	BRACKET	1	
23	97075-06025-00	BOLT	2	
24	92995-06600-00	WASHER	2	
25	93501-04M02-00	BALL	1	
26	90501-12082-00	SPRING, COMPRESSION	1	
27	648-42715-00-00	BUSHING	1	
28	663-48344-00-00	.CABLE END, REMOTE CONTROL	1	
29	90468-18008-00	CLIP	1	
30	68V-42157-00-00	LEVER, THROTTLE	1	
31	68V-42171-00-00	BUSHING	1	
32	90201-10M02-00	WASHER, PLATE	1	
33	90206-10M04-00	WASHER, WAVE	1	
34	90387-06M21-00	COLLAR	1	
35	90179-06M28-00	NUT	1	
36	68V-42154-00-00	LEVER, THROTTLE CONTROL	1	
37	67F-44135-00-00	SPRING	1	
38	90387-06M21-00	COLLAR	1	
39	97095-06035-00	BOLT	1	

CONTINUED ON NEXT FRAME >

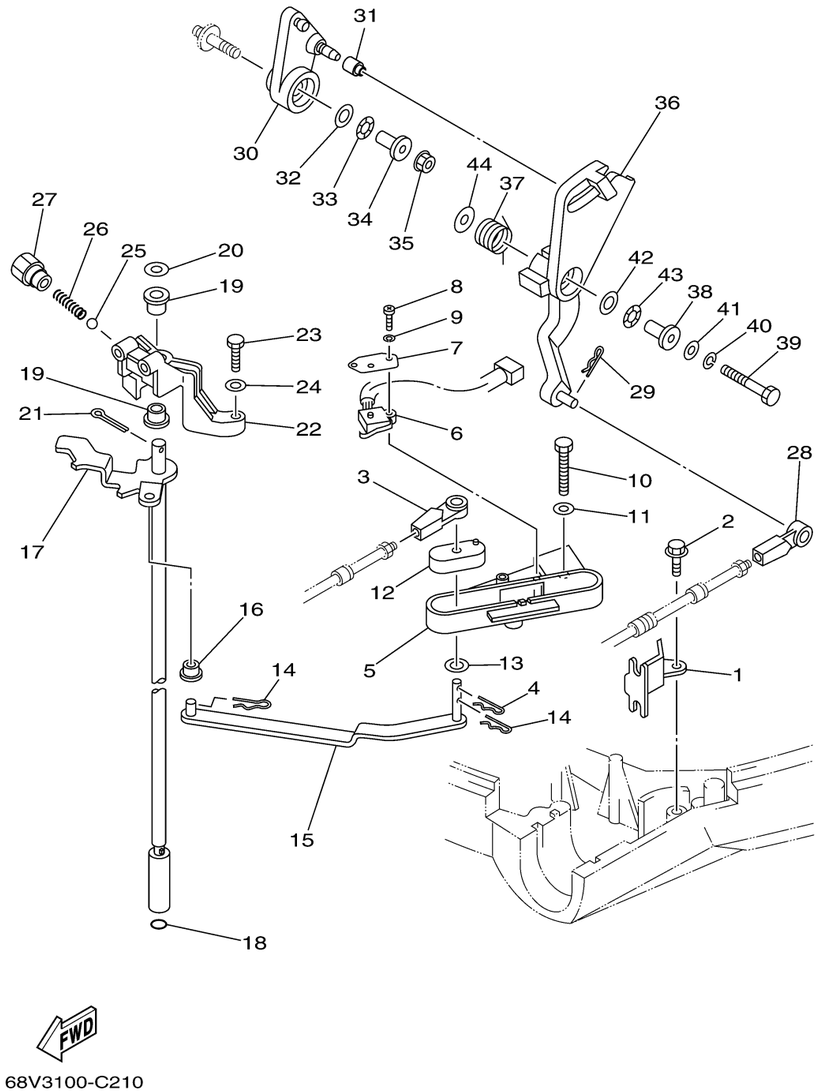

68V3100-C210

CONTROL

Ref No.	Part Number	Description	Qty	Remarks
40	92995-06100-00	WASHER, SPRING	1	
41	92995-06600-00	WASHER	1	
42	90201-10M02-00	WASHER, PLATE	1	
43	90206-10M04-00	WASHER, WAVE	1	
44	90201-06M31-00	WASHER, PLATE	1	