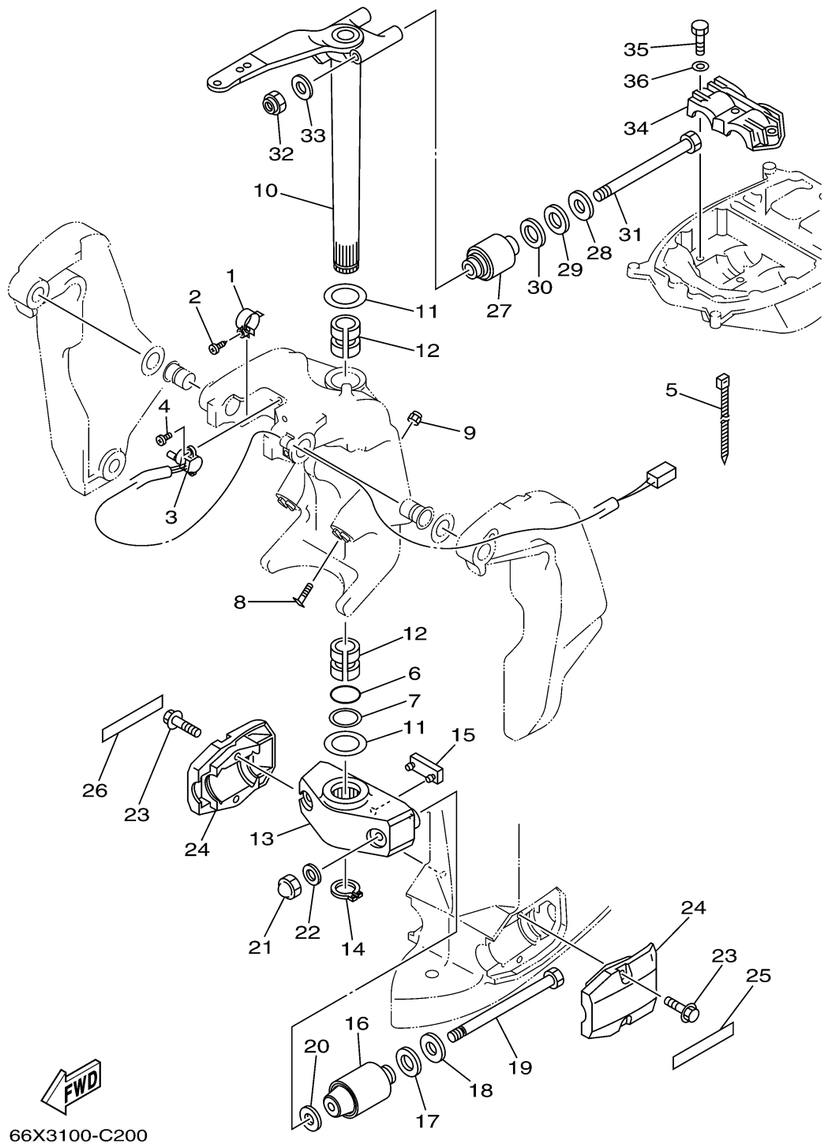

66X3100-C200

BRACKET 2

Ref No.	Part Number	Description	Qty	Remarks
1	64E-43139-02-00	CAM, TRIM SENDER	1	
2	97780-60525-00	SCREW, TAPPING	1	
3	67H-83672-00-00	TRIM SENDER	1	
4	97885-06016-00	SCREW, PAN HEAD	2	
5	90465-11M10-00	.CLAMP	3	
6	93210-37MH7-00	O-RING	1	
7	90202-40M47-00	WASHER, PLATE	1	
8	64E-43376-00-00	BOLT, THRUST RECEIVER	2	
9	95780-10300-00	NUT, FLANGE	2	
10	66K-42510-01-8D	STEERING BRACKET ASSY	1	
11	90201-38M60-00	WASHER, PLATE	2	
12	90386-38M32-00	BUSH	2	
13	60X-44551-00-8D	HOUSING, LOWER MOUNT RUBBER	1	
14	93410-37M04-00	CIRCLIP	1	
15	6E5-44575-00-00	DAMPER, LOWER MOUNT RUBBER	1	
16	66K-44555-00-94	MOUNT DAMPER, LOWER SIDE	2	
17	90202-32M19-00	WASHER, PLATE	2	
18	90201-16M55-00	WASHER, PLATE	2	
19	90109-14M80-00	BOLT	2	
20	90201-15M58-00	WASHER, PLATE	2	

CONTINUED ON NEXT FRAME >

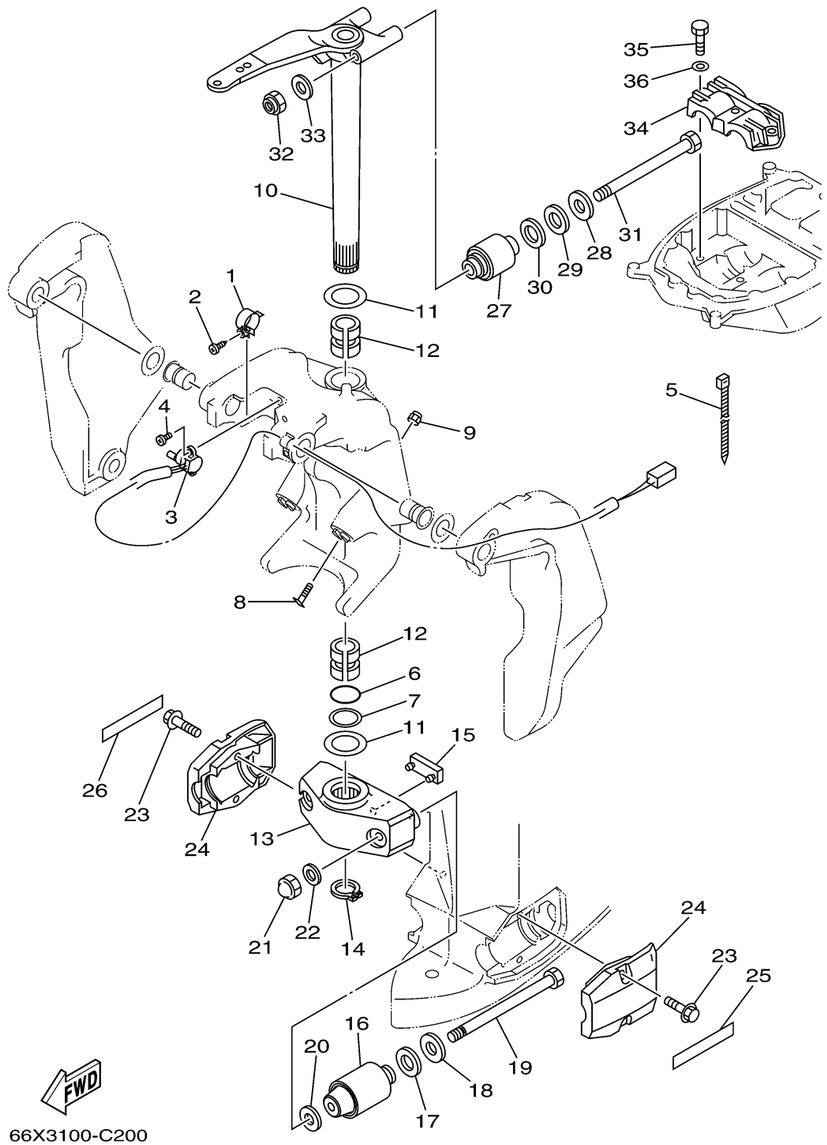

66X3100-C200

BRACKET 2

Ref No.	Part Number	Description	Qty	Remarks
21	95380-14800-00	NUT	2	
22	92995-14600-00	WASHER	2	
23	90101-10M70-00	BOLT	4	
24	60X-44553-00-NA	COVER, LOWER MOUNT	2	
25	65N-43155-N0-00	MARK 1	1	
26	65N-43156-N0-00	MARK 2	1	
27	66K-44514-00-94	MOUNT DAMPER, UPPER SIDE	2	
28	90201-16M01-00	WASHER, PLATE	2	
29	90202-28M46-00	WASHER, PLATE	2	
30	90201-28M01-00	WASHER, PLATE	2	
31	90109-14003-00	BOLT	2	
32	90185-14M00-00	NUT, SELF-LOCKING	2	
33	92995-14600-00	WASHER	2	
34	61A-44511-00-94	COVER, UPPER MOUNT	1	
35	97095-10045-00	BOLT	3	
36	92995-10600-00	WASHER	3	