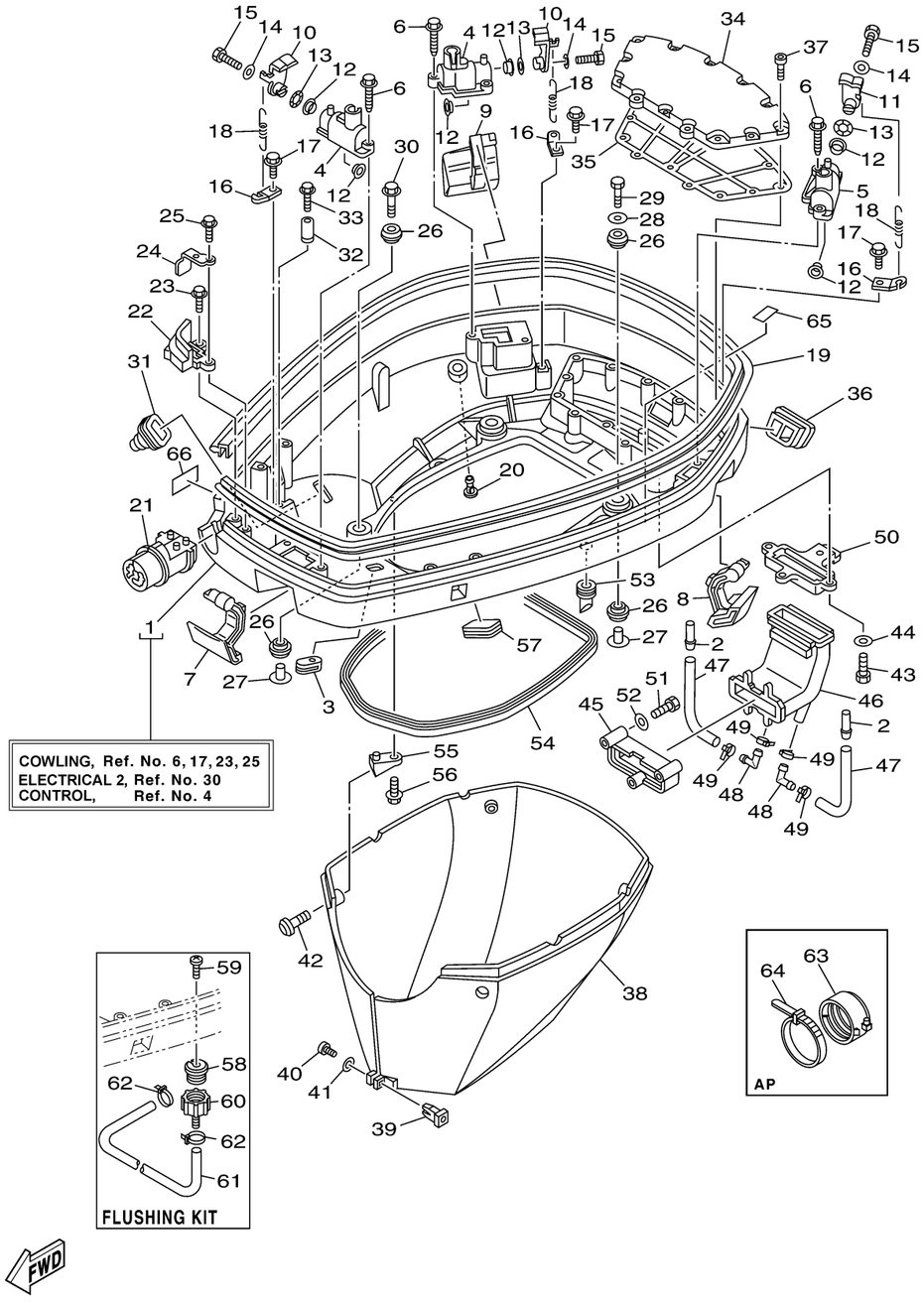

60X3110-D210

BOTTOM COWLING

Ref No.	Part Number	Description	Qty	Remarks
1	60V-42710-00-8D	BOTTOM COWLING ASSY	1	
2	6E5-24377-00-00	PIPE, JOINT 2	2	
3	61A-42727-00-00	GROMMET	1	
4	68F-42828-00-94	PLATE, CLAMP	2	
5	68F-42828-10-94	PLATE, CLAMP	1	
6	90109-06M82-00	BOLT	6	
7	60V-42815-00-8D	LEVER, CLAMP	1	
8	60V-42816-00-8D	LEVER, CLAMP	1	
9	60V-42817-00-8D	LEVER, CLAMP	1	
10	68F-42818-01-00	LEVER, CLAMP	2	
11	6D8-42818-00-00	LEVER, CLAMP	1	
12	90386-15M73-00	BUSH	6	
13	90206-15M18-00	WASHER, WAVE	3	
14	90201-06068-00	WASHER, PLATE	3	
15	97095-06016-00	BOLT	3	
16	64D-43144-00-00	HOOK, SPRING	3	
17	90109-06M80-00	BOLT	3	
18	90506-16M34-00	SPRING, TENSION	3	
19	60V-42615-00-00	SEAL	1	
20	6E5-44391-00-00	NIPPLE, HOSE	1	

CONTINUED ON NEXT FRAME >

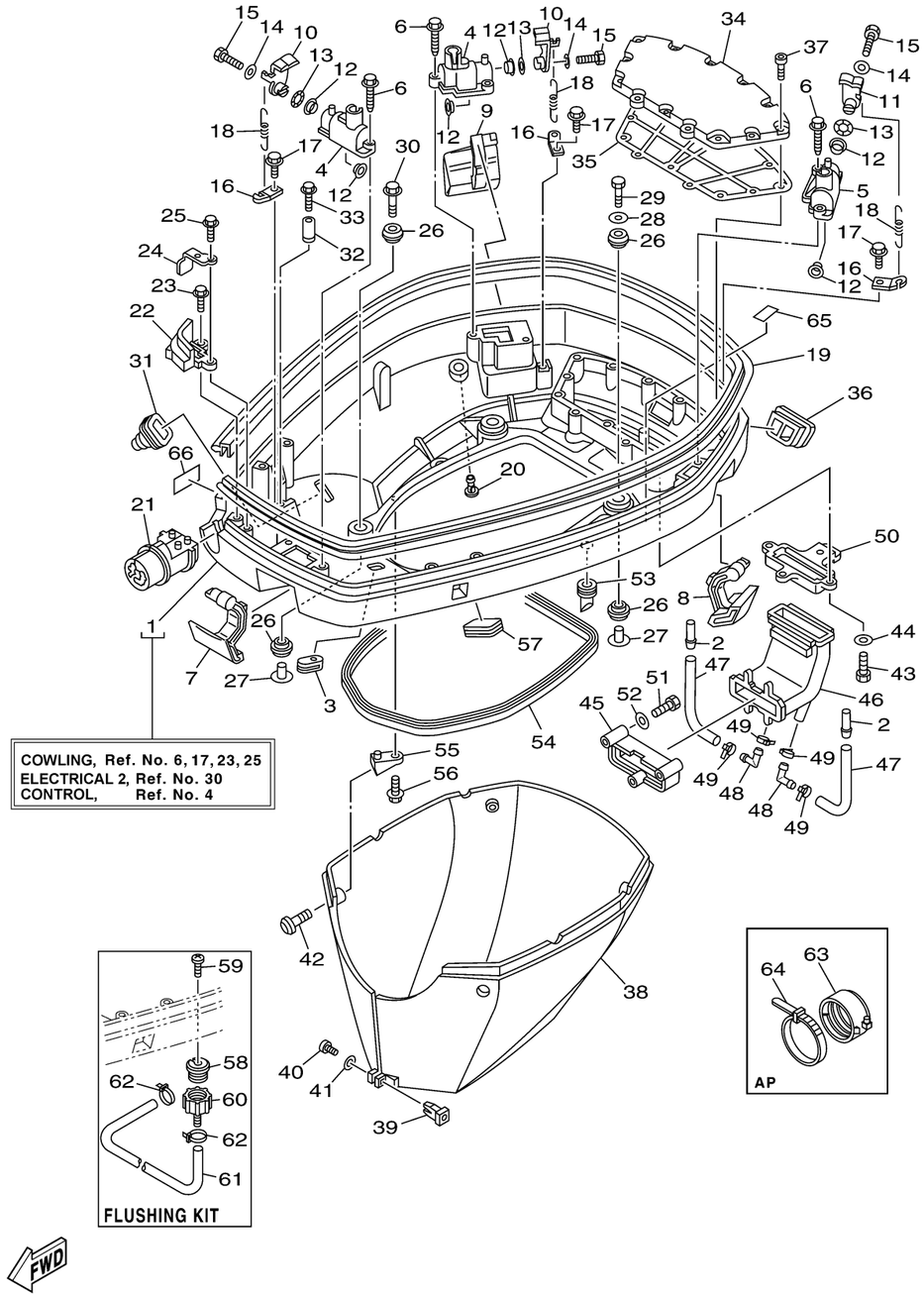

60X3110-D210

BOTTOM COWLING

Ref No.	Part Number	Description	Qty	Remarks
21	60V-42725-00-00	GROMMET	1	
22	60V-42738-00-8D	PLATE, FITTING	1	
23	90109-06M81-00	BOLT	2	
24	64D-42738-10-5B	PLATE, FITTING	1	
25	90109-06M81-00	BOLT	1	
26	90480-22M81-00	GROMMET	8	
27	90387-08M37-00	COLLAR	4	
28	90201-08M54-00	WASHER, PLATE	1	
29	97075-08035-00	BOLT	1	
30	90119-08M22-00	BOLT, WITH WASHER	3	
31	688-42726-10-00	GROMMET	1	
32	6E5-82588-00-00	PLATE	1	
33	95895-06020-00	BOLT, FLANGE	1	
34	60V-42723-00-5B	COVER, BOTTOM	1	
35	60V-42721-A0-00	GASKET 1	1	
36	60V-42718-00-00	RUBBER, SEAL 3	1	
37	90110-06038-00	BOLT, HEXAGON SOCKET HEAD	13	
38	60V-42741-00-8D	APRON	1	
39	60V-42756-00-00	STAY, CLAMP	1	
40	97880-04016-00	SCREW, PAN HEAD	1	

CONTINUED ON NEXT FRAME >

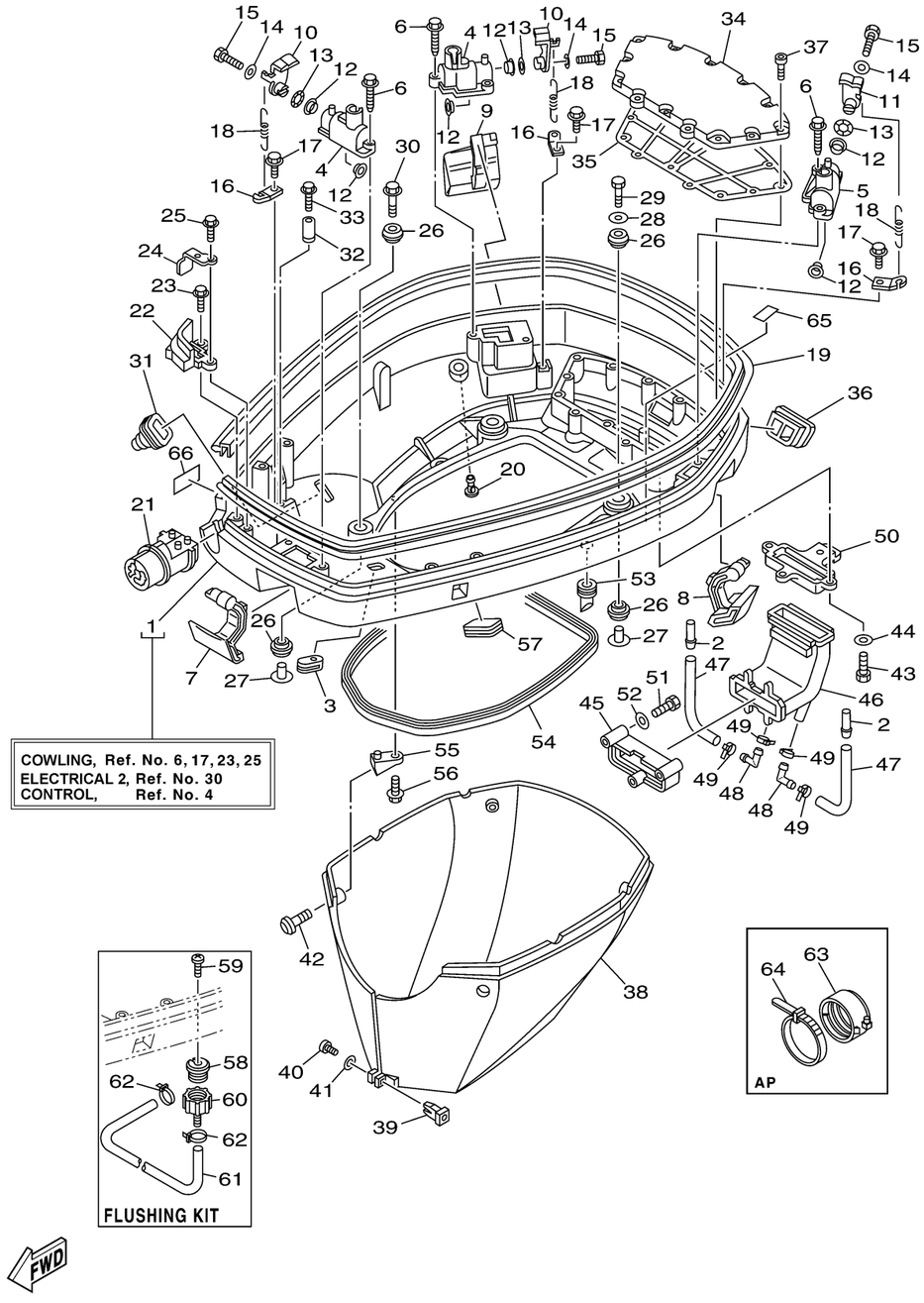

60X3110-D210

BOTTOM COWLING

Ref No.	Part Number	Description	Qty	Remarks
41	92990-04600-00	WASHER, PLATE	1	
42	90111-06034-00	BOLT,HEX. SOCKET BUTTON	4	
43	97095-06020-00	BOLT	4	
44	92995-06600-00	WASHER	4	
45	60V-12581-00-00	JOINT, HOSE 1	1	
46	60V-12576-00-00	HOSE 1	1	
47	60V-12588-00-00	HOSE 5	2	
48	60X-24376-00-00	PIPE, JOINT 1	2	
49	90465-11M10-00	CLAMP	4	
50	60V-42771-00-00	APRON	1	
51	97075-08055-00	BOLT	3	
52	92995-08600-00	WASHER	3	
53	61A-42717-00-00	RUBBER, SEAL 2	4	
54	61A-42716-00-00	RUBBER, SEAL 1	1	
55	60V-42774-00-00	STAY, APRON 1	4	
56	95895-06016-00	BOLT, FLANGE	4	
57	6H4-42726-00-00	GROMMET	1	
58	6R3-12572-00-00	.ADAPTER	1	FLUSHING KIT
59	90169-05M00-00	SCREW, TRUSS HEAD TAPPING	1	FLUSHING KIT
60	6R3-12580-00-00	.JOINT ASSY	1	FLUSHING KIT

CONTINUED ON NEXT FRAME >

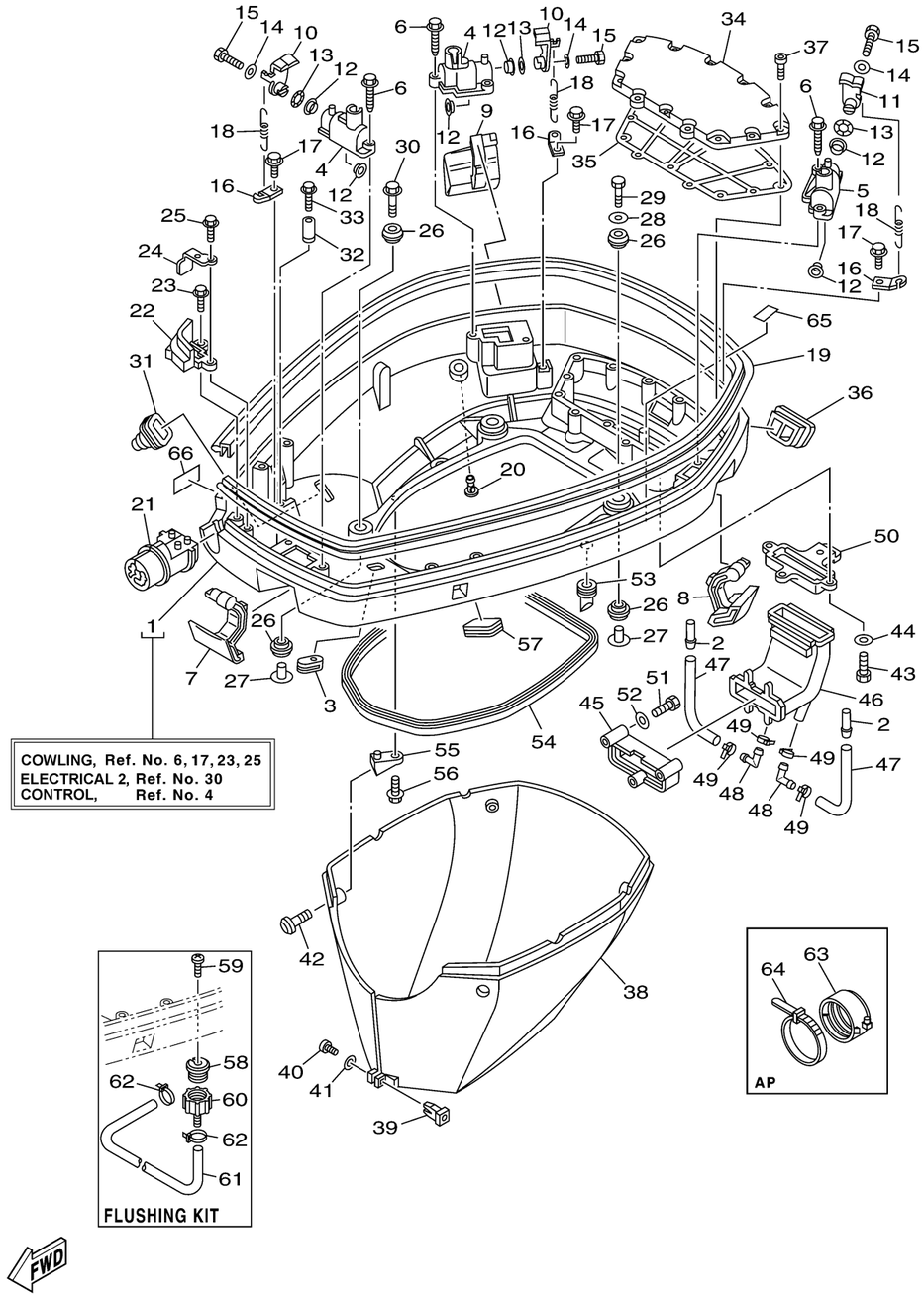

BOTTOM COWLING

Ref No.	Part Number	Description	Qty	Remarks
61	90445-11M36-00	HOSE (L: 620)	1	FLUSHING KIT
62	90465-11M10-00	CLAMP	2	FLUSHING KIT
63	68F-42753-00-00	FASTNER	1	AP
64	90464-20258-00	CLAMP	1	AP
65	68H-42791-01-00	MARK 1	1	
66	60V-2415E-40-00	LABEL, CAUTION	1	