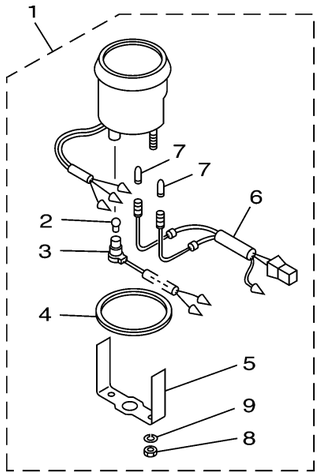

TACHOMETER

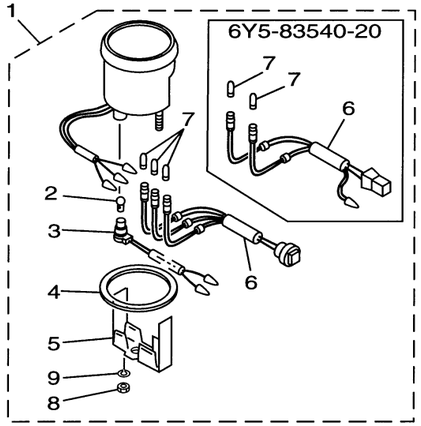

TACHOMETER

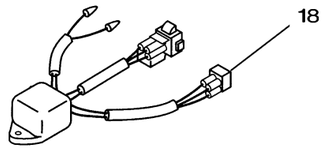

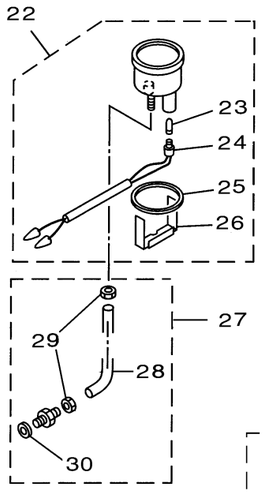

WATER PRESSURE

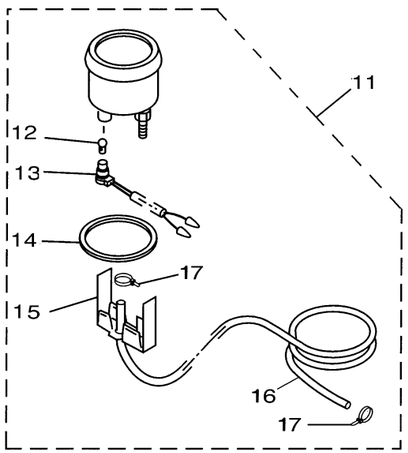

SPEEDOMETER

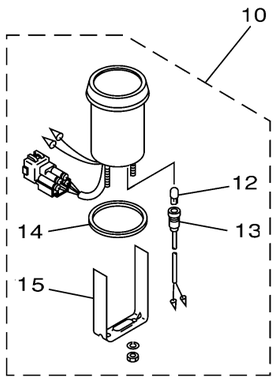

SPEEDOMETER

INSTRUMENTS ANALOGUE

Ref No.	Part Number	Description	Qty	Remarks
1	6Y5-83540-14-00	PRO TACHOMETER ASSY WO OIL	1	
1	6Y5-83540-05-00	PRO TACHOMETER ASSY WOIL	1	
1	6Y5-83540-20-00	FOURSTROKE 50 TACHOMETER	1	
1	6Y7-83540-60-00	PRO SERIES 11 TACHOMETER W/OIL (BLACK)	1	(2 LAMP BLACK)
1	6Y7-83540-70-00	PRO SERIES 11 TACHOMETER W/OIL (WHITE)	1	(2 LAMP WHITE)
2	6Y5-83517-00-00	. BULB (T10, 12V-1.7W)	1	
3	6Y5-83536-10-00	. .SOCKET, METER	1	
4	6Y5-83523-00-00	. DAMPER	1	
5	6Y5-83514-00-00	. PLATE, FITTING	1	
6	6Y5-83509-03-00	. .SOCKET CORD ASSY	1	
7	6Y5-83518-00-00	. BULB (12V-1.7W T6.5)	3	
8	95303-05600-00	. NUT	2	
9	92903-05100-00	. . .WASHER, SPRING	2	
10	6Y5-83670-12-00	TRIM METER ASSY	1	
10	6Y5-83670-30-00	PRO SERIES 11 TRIM METER (WHITE)	1	
10	6Y5-83670-10-00	PRO SERIES 11 TRIM METER (BLACK)	1	
11	6Y7-83510-10-00	SPEEDOMETER ASSY (75MPH)	1	SPEED 75
11	6Y5-83510-00-00	SPEEDOMETER (0-75M)	1	SPEED 75
11	6Y5-83510-10-00	PRO SERIES II SPEEDOMETER (0-75MPH)	1	SPEED 50
11	6Y7-83510-00-00	SPEEDOMETER ASSY (75MPH)	1	SPEED 75

CONTINUED ON NEXT FRAME >

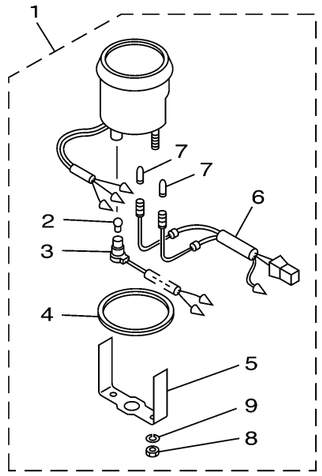

TACHOMETER

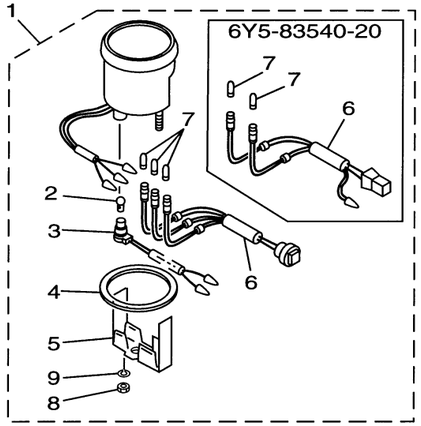

TACHOMETER

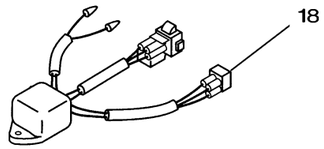

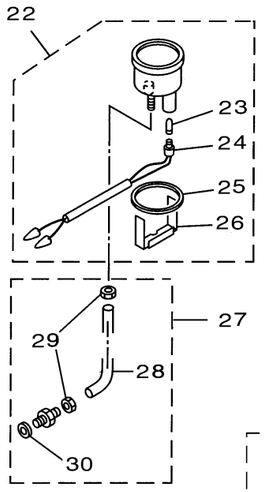

WATER PRESSURE

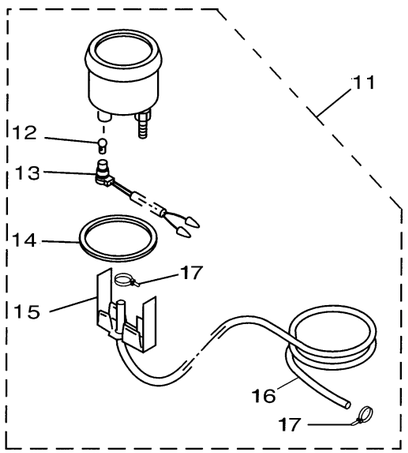

SPEEDOMETER

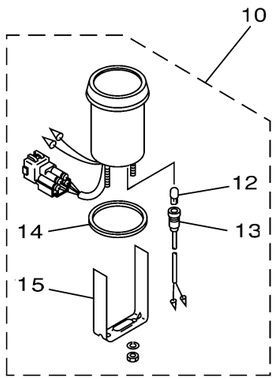

SPEEDOMETER

INSTRUMENTS ANALOGUE

Ref No.	Part Number	Description	Qty	Remarks
12	6Y5-83518-00-00	. BULB (12V-1.7W T6.5)	1	
13	6Y5-83536-00-00	. .SOCKET, METER	1	
14	688-83664-00-00	. .DAMPER	1	
15	6Y5-83544-00-00	. .PLATE, FITTING	1	
16	688-83557-00-00	.TUBE	1	
17	90465-11M10-00	CLAMP	2	
18	6Y5-81950-02-00	RELAY ASSY	1	FOR 6Y5 OIL LIGHT
19	6Y7-85750-10-00	FUEL METER ASSY	1	NOT SHOWN
19	6Y7-85750-30-00	FUEL METER ASSY	1	NOT SHOWN
20	6Y7-83503-10-00	VOLTMETER ASSY	1	NOT SHOWN
20	6Y5-83503-00-00	VOLT METER	1	NOT SHOWN
20	6Y7-83503-00-00	VOLTMETER ASSY	1	NOT SHOWN
21	6Y5-83590-00-00	WATER TEMP METER	1	NOT SHOWN
22	6Y7-83660-30-00	WATER PRESSURE METER ASSY	1	
22	6Y7-83660-10-00	WATER PRESSURE METER ASSY	1	
23	6Y5-83518-00-00	. BULB (12V-1.7W T6.5)	1	
24	6Y5-83536-00-00	. .SOCKET, METER	1	
25	688-83664-00-00	. .DAMPER	1	
26	688-83665-00-00	. .PLATE, FITTING	1	
27	688-83667-00-00	SENDER	1	

CONTINUED ON NEXT FRAME >

INSTRUMENTS ANALOGUE

Ref No.	Part Number	Description	Qty	Remarks
28	688-83666-00-00	. .TUBE	1	
29	663-83668-00-00	. .NUT, NIPPLE	2	
30	90430-14115-00	. .GASKET	1	
31	6Y7-83590-00-00	WATER TEMPERATURE ASSY	1	NOT SHOWN
31	6Y7-83590-10-00	WATER TEMPERATURE ASSY	1	NOT SHOWN

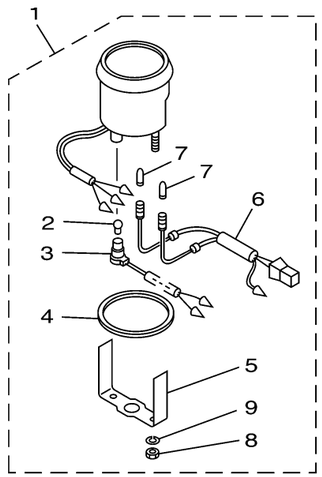

TACHOMETER

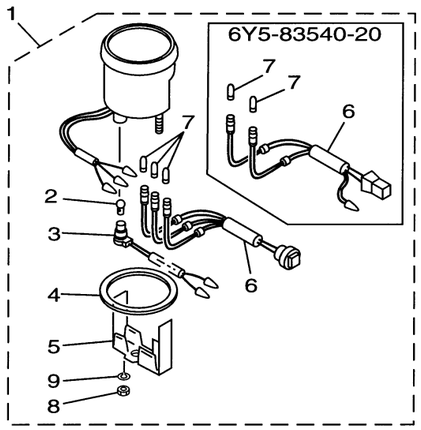

TACHOMETER

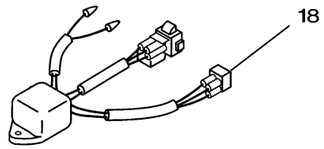

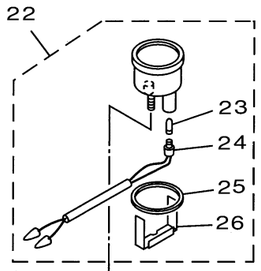

WATER PRESSURE

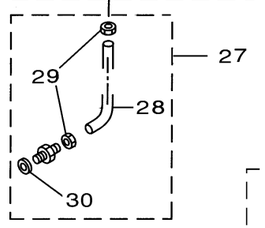

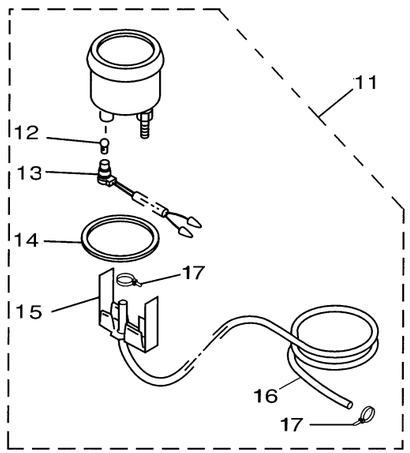

SPEEDOMETER

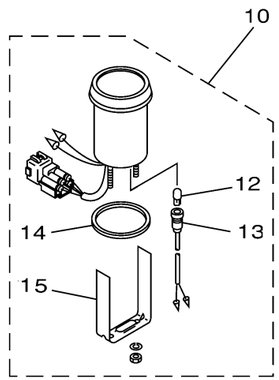

SPEEDOMETER