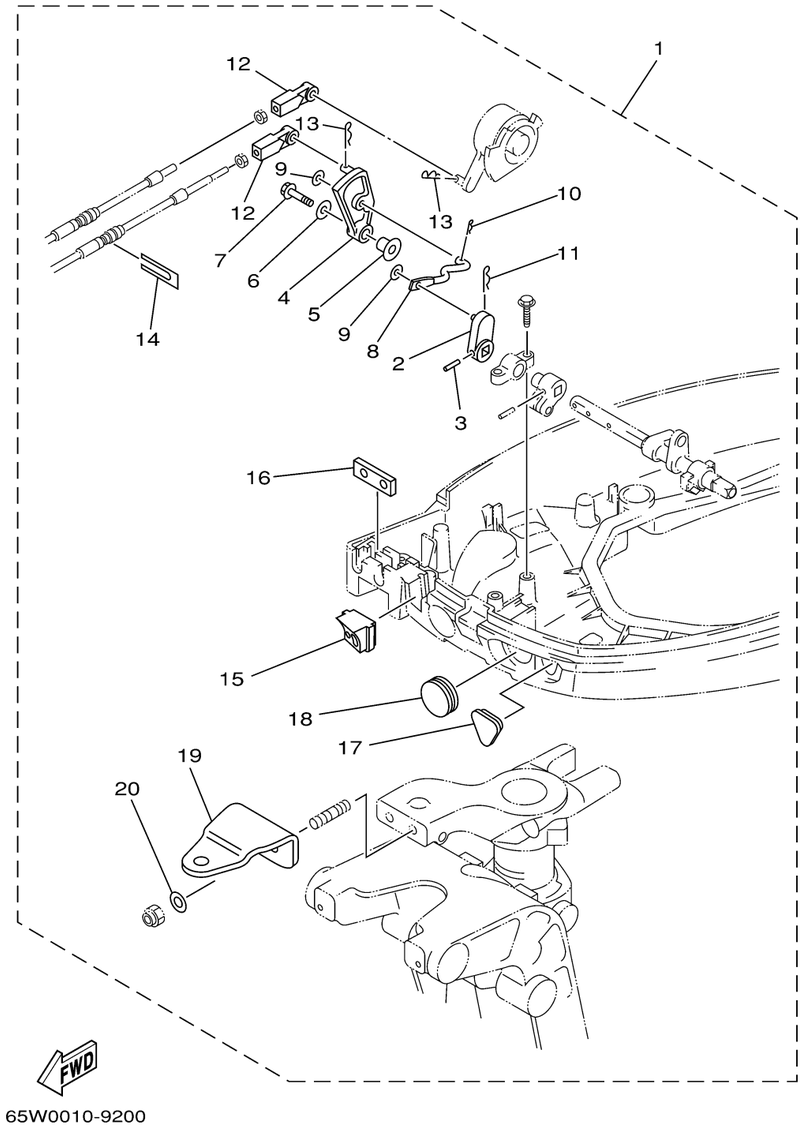

65W0010-9200

REMO CON ATTACHMENT

Ref No.	Part Number	Description	Qty	Remarks
1	65W-48501-00-00	REMOTE CONT. ATTACHMENT ASSY.	1	AP MH/EH
2	65W-44142-00-00	. .JOINT	1	
3	90254-03M05-00	. PIN, SPRING	1	
4	65W-44125-00-00	. .LEVER, SHIFT ROD	1	
5	90387-06M29-00	. COLLAR	1	
6	90201-06M31-00	. .WASHER, PLATE	1	
7	97595-06525-00	. BOLT, WITH WASHER	1	
8	65W-44192-00-00	. .JOINT, ROD 1	1	
9	90201-05M06-00	. .WASHER, PLATE	2	
10	90468-10005-00	. CLIP	1	
11	90468-18008-00	. .CLIP	1	
12	663-48344-00-00	. .CABLE END, REMOTE CONTROL	2	
13	90468-18008-00	. .CLIP	2	
14	6H3-48538-00-00	. .CLAMP, CABLE 1	1	
15	65W-42725-21-00	. .GROMMET	1	
16	62Y-42727-00-00	. GROMMET	1	
17	65W-26326-10-00	. .GROMMET	1	
18	65W-42726-10-00	. .GROMMET	1	
19	65W-48511-00-00	. HOOK, STEERING	1	
20	90201-10120-00	. .WASHER, PLATE	2	