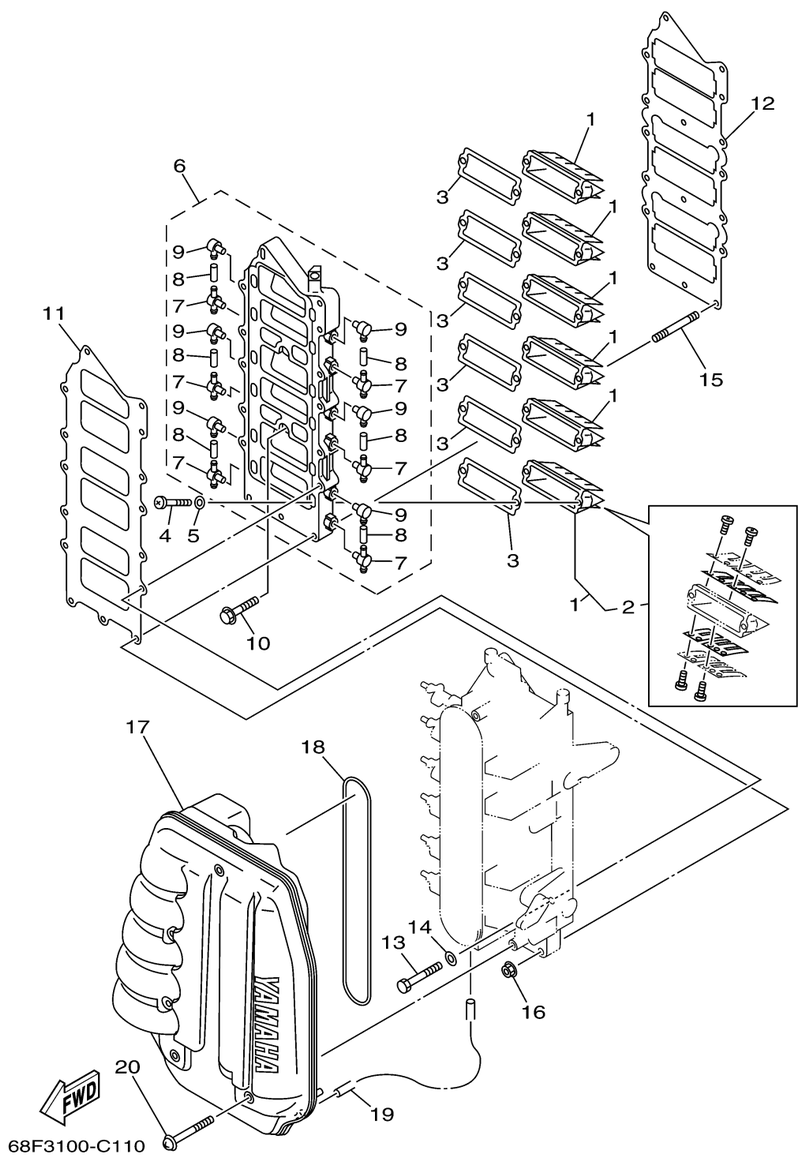

INTAKE

Ref No.	Part Number	Description	Qty	Remarks
1	65L-13610-01-00	REED VALVE ASSY	6	UR (L) Z200
1	68H-13610-00-00	REED VALVE ASSY	6	UR (L) Z150, Z175
2	65J-W0004-01-00	. .REED SET	1	
3	61A-13621-A0-00	.GASKET, VALVE SEAT	6	
4	97880-05016-00	SCREW, PAN HEAD	12	
5	92990-05600-00	WASHER, PLATE	12	
6	68F-13624-00-1S	PLATE,REED VALVE	1	
7	6F6-11372-01-00	. .NIPPLE, HOSE	6	
8	90445-07M03-00	. .HOSE (L34)	6	
9	650-11370-01-00	. .CHECK VALVE ASSY	6	
10	90105-06028-00	BOLT, FLANGE	2	
11	65L-13646-00-00	.GASKET, MANIFOLD 2	1	
12	65L-13645-00-00	.GASKET, MANIFOLD 1	1	
13	97013-06060-00	BOLT	11	
14	92903-06600-00	WASHER, PLATE	11	
15	95670-06660-00	BOLT, STUD	2	
16	90179-06M24-00	NUT	2	
17	60V-14440-00-00	SILENCER ASSY, INTAKE	1	
18	60V-14476-00-00	.SEAL	1	
19	90445-07M44-00	HOSE (L250)	1	

CONTINUED ON NEXT FRAME >

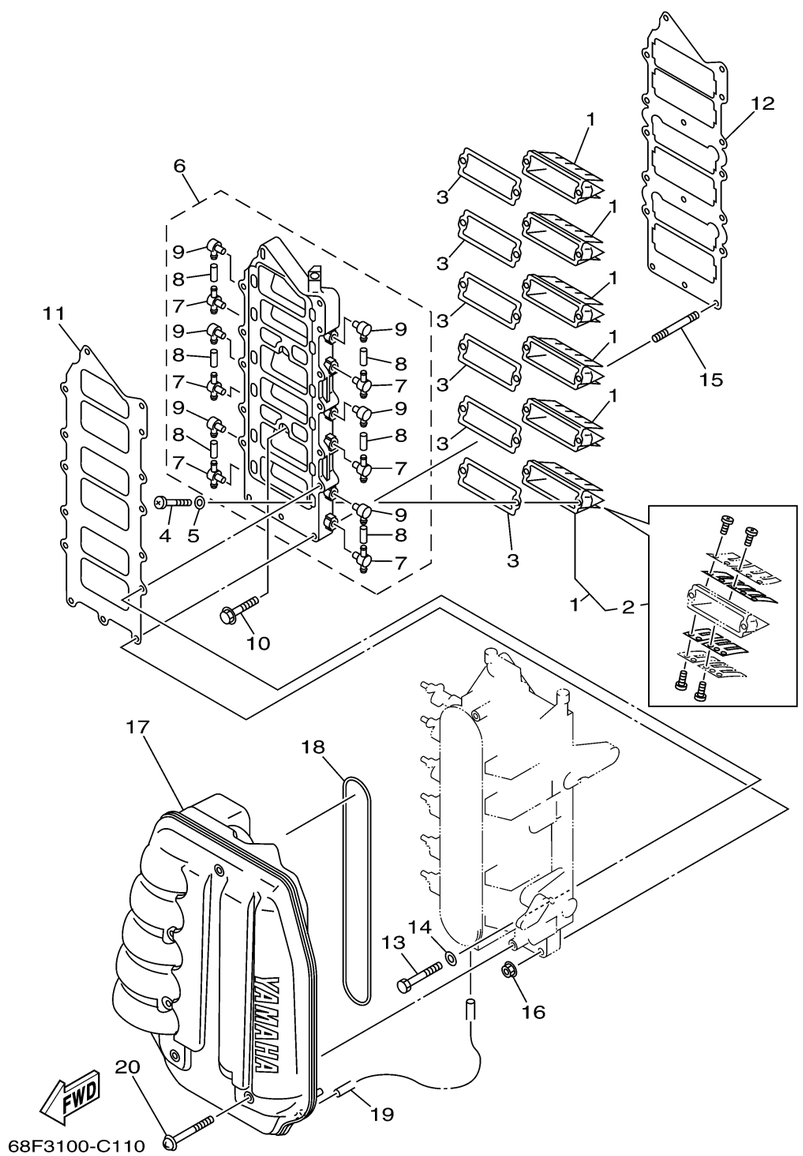

INTAKE

Ref No.	Part Number	Description	Qty	Remarks
20	90159-06M16-00	SCREW, WITH WASHER	6	