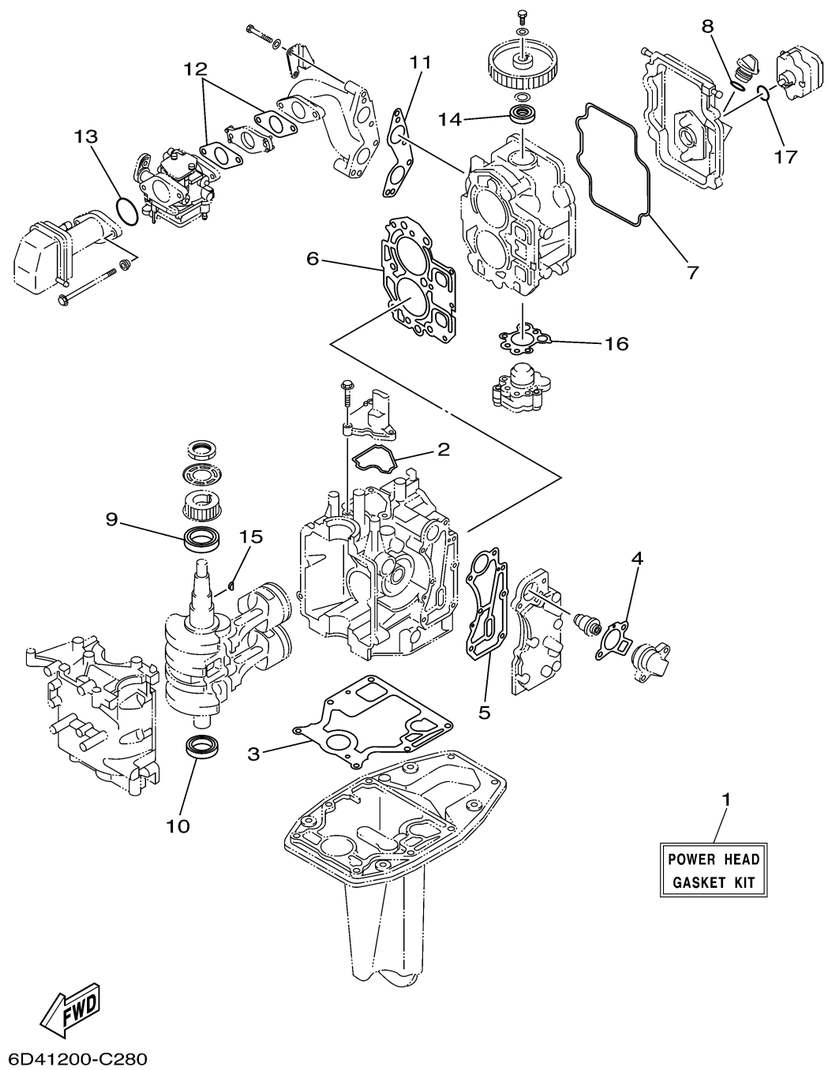

REPAIR KIT 1

Ref No.	Part Number	Description	Qty	Remarks
1	66M-W0001-02-00	POWER HEAD GASKET KIT	1	
2	66M-11357-00-00	. .SEAL, CYLINDER 3	1	
3	66M-11351-10-00	. .GASKET, CYLINDER	1	
4	62Y-12414-00-00	. .GASKET, COVER	1	
5	66M-41114-01-00	. .GASKET, EXHAUST OUTER COVER	1	
6	66M-11181-10-00	. .GASKET, CYLINDER HEAD 1	1	
7	66M-11356-00-00	. .SEAL, CYLINDER 2	1	
8	93210-24M79-00	. .O-RING	1	
9	93102-35M51-00	. .OIL SEAL	1	
10	93102-25M52-00	. .OIL SEAL	1	
11	66M-13645-00-00	. .GASKET, MANIFOLD 1	1	
12	66M-13646-00-00	. .GASKET, MANIFOLD 2	2	
13	93210-35M86-00	. .O-RING	1	
14	93102-18M21-00	. .OIL SEAL	1	
15	90280-03M01-00	. KEY, WOODRUFF	1	
16	66M-13329-10-00	. .GASKET, PUMP COVER	1	
17	93210-20M65-00	. .O-RING	1	