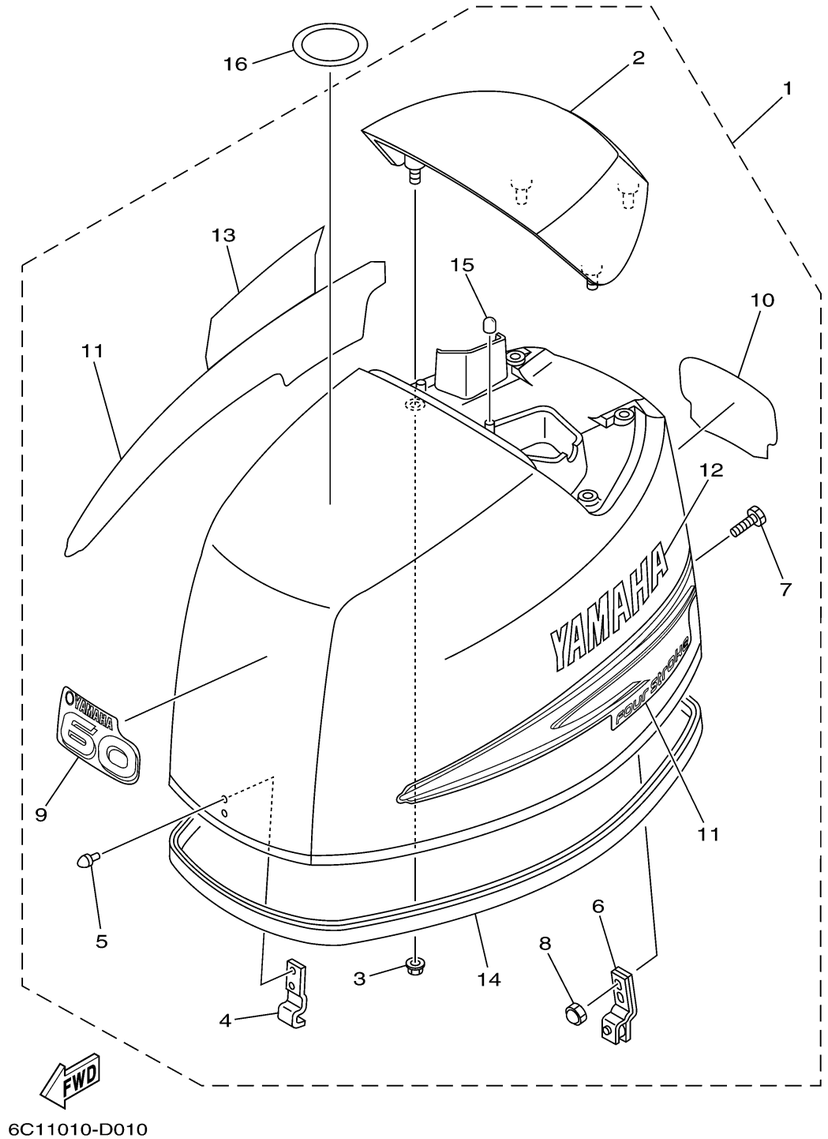

6C11010-D010

TOP COWLING

Ref No.	Part Number	Description	Qty	Remarks
1	6C1-42610-00-4D	TOP COWLING ASSY	1	UR F50
1	6C5-42610-00-4D	TOP COWLING ASSY	1	UR F60
1	6C5-42610-A0-4D	TOP COWLING ASSY	1	UR F60TJR
2	67C-42613-00-4D	. .MOLDING, AIR DUCT	1	
3	90179-06029-00	. ..NUT	4	
4	6C5-42651-00-00	. .HOOK	1	
5	90266-06M02-00	. ..RIVET	2	
6	67C-42652-02-00	. .HOOK	1	
7	90109-06047-00	. ..BOLT	2	
8	90185-06M05-00	. ..NUT, SELF-LOCKING	2	
9	69W-42677-00-00	. .GRAPHIC, FRONT	1	UR F60
9	69W-42677-A0-00	. .GRAPHIC, FRONT	1	UR F60TJR
9	62Y-42677-30-00	. .GRAPHIC, FRONT	1	UR F50
10	6C5-42678-00-00	. .GRAPHIC, REAR	1	UR F60
10	6C1-42678-00-00	. .GRAPHIC, REAR	1	UR F50
10	6C5-42678-A0-00	. .GRAPHIC, REAR	1	UR F60TJR
11	69W-W0070-00-00	. .GRAPHIC SET	1	
12	69W-42681-00-00	. .MARK, COWLING	1	
13	69W-42682-00-00	. .MARK, COWLING	1	
14	6C5-42615-00-00	. .SEAL	1	

CONTINUED ON NEXT FRAME >

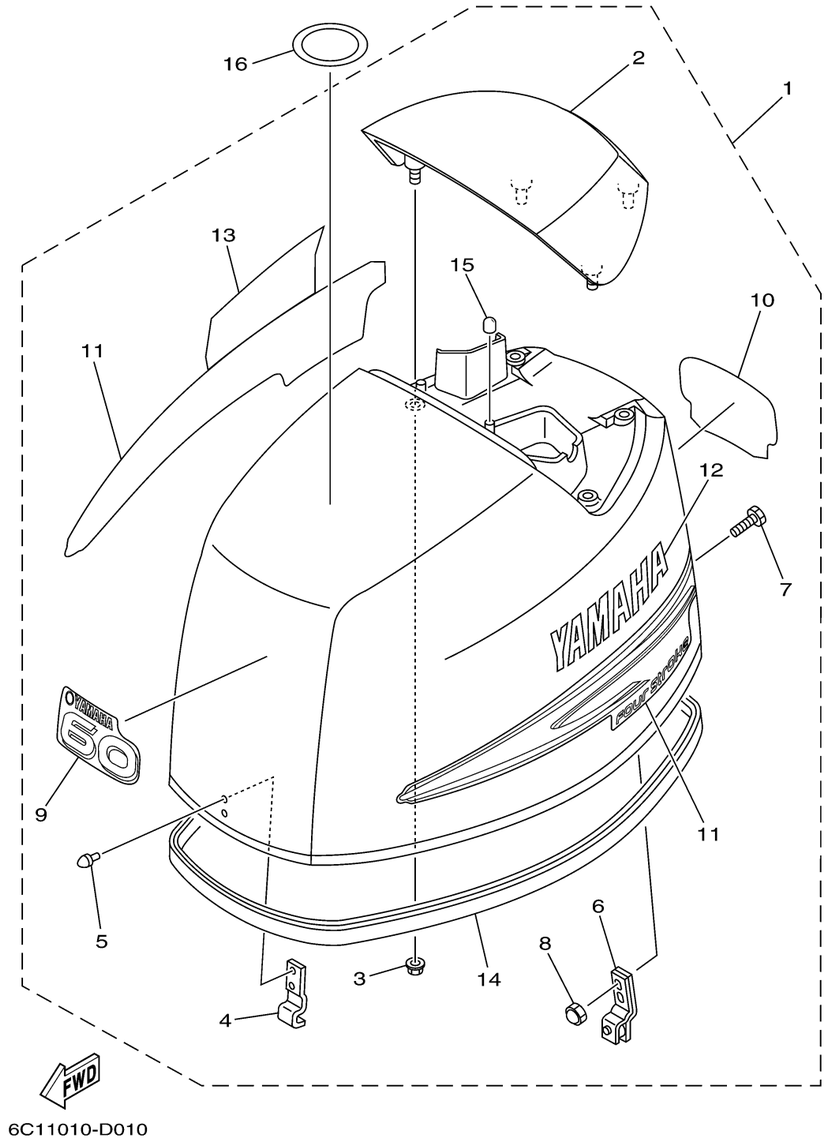

6C11010-D010

TOP COWLING

Ref No.	Part Number	Description	Qty	Remarks
15	69W-13448-00-00	. .CAP	2	
16	67F-13434-03-00	LABEL, CAUTION	1	