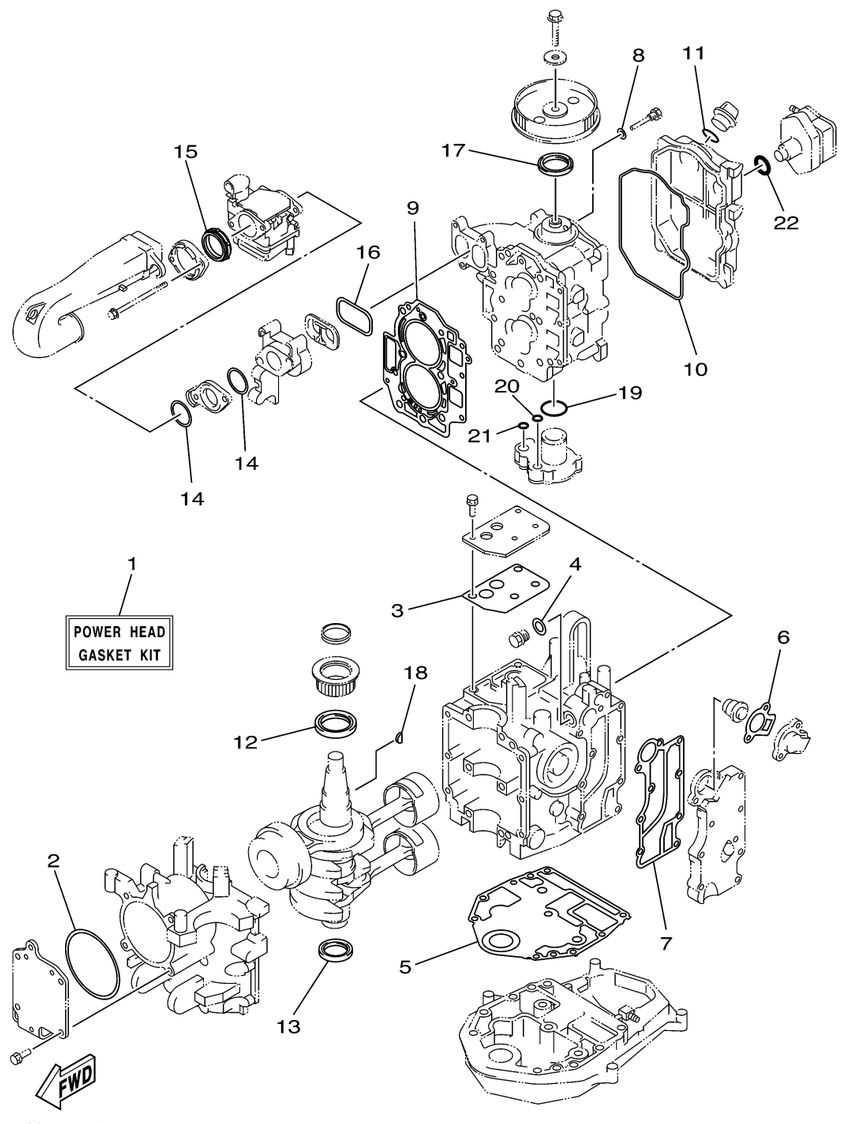

68U2100-3290

REPAIR KIT 1

Ref No.	Part Number	Description	Qty	Remarks
1	6D5-W0001-00-00	POWER HEAD GASKET KIT	1	
2	65W-15663-00-00	. .SEAL	1	
3	65W-11169-01-00	. .GASKET, BREATHER COVER	1	
4	90430-14115-00	. .GASKET	1	
5	65W-11351-10-00	. .GASKET, CYLINDER	1	
6	62Y-12414-00-00	. .GASKET, COVER	1	
7	65W-41114-00-00	. .GASKET, EXHAUST OUTER COVER	1	
8	90430-06014-00	. .GASKET	1	
9	65W-11181-30-00	. .GASKET, CYLINDER HEAD 1	1	
10	65W-11356-00-00	. .SEAL, CYLINDER 2	1	
11	93210-24M79-00	. .O-RING	1	
12	93102-43004-00	. .OIL SEAL	1	
13	93101-35002-00	. .OIL SEAL	1	
14	65W-14198-00-00	. .GASKET	2	
15	65W-14457-10-00	. .SEAL	1	
16	65W-13645-00-00	. .GASKET, MANIFOLD 1	1	
17	93102-37M40-00	. .OIL SEAL	1	
18	90280-04M06-00	. KEY, WOODRUFF	1	
19	93210-33MH2-00	. .O-RING	1	
20	93210-12MG9-00	. .O-RING	1	

CONTINUED ON NEXT FRAME >

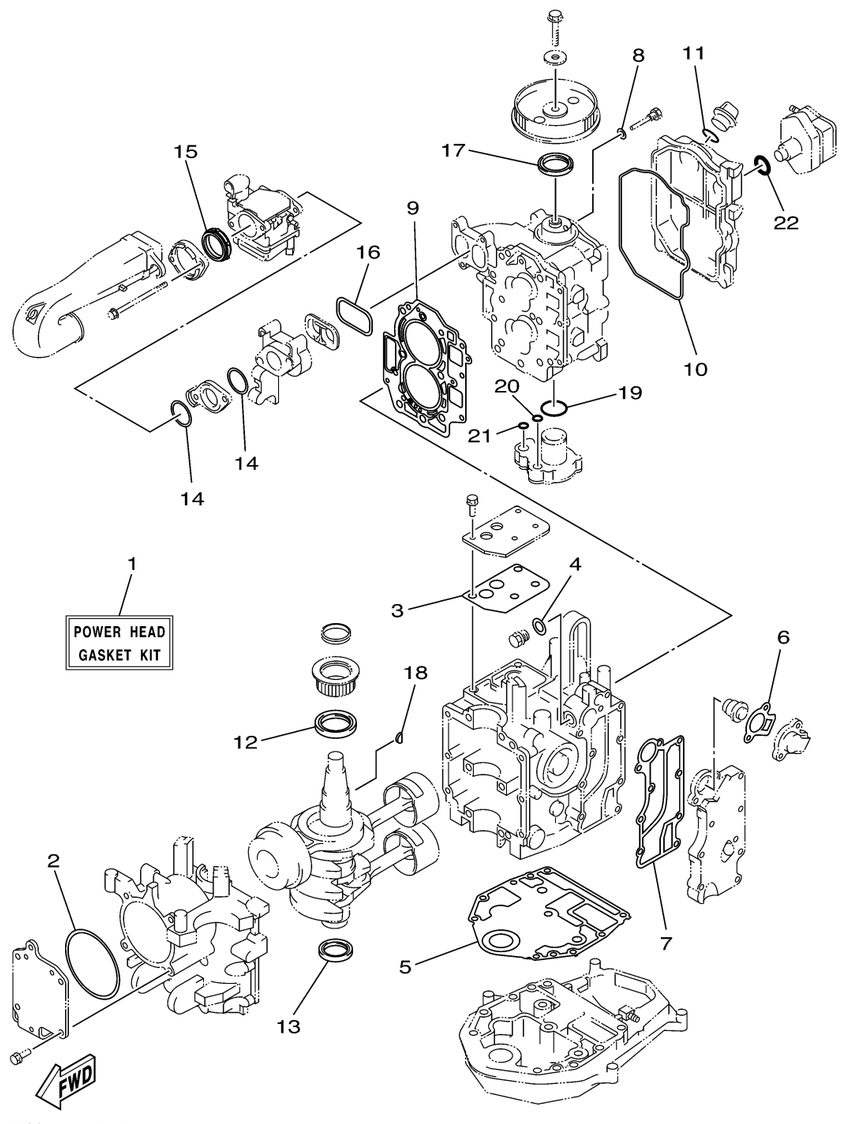

REPAIR KIT 1

Ref No.	Part Number	Description	Qty	Remarks
21	93210-14515-00	. .O-RING	1	
22	93210-24M79-00	. .O-RING	1	