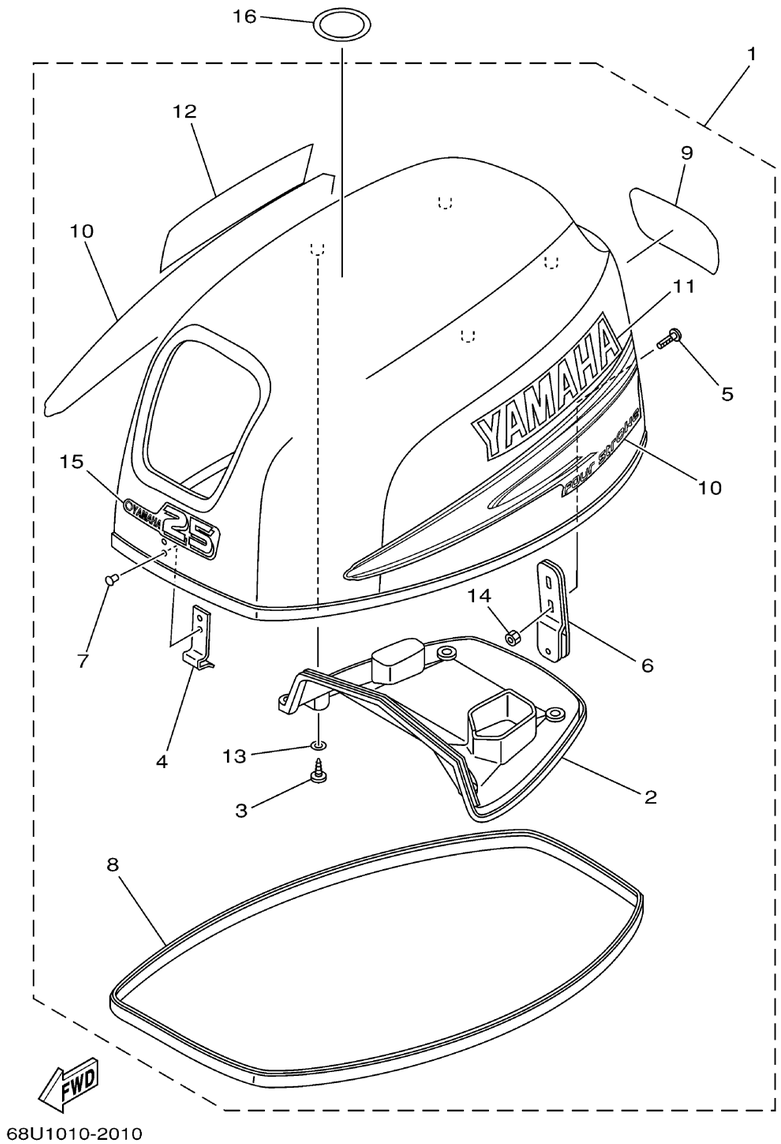

68U1010-2010

TOP COWLING

Ref No.	Part Number	Description	Qty	Remarks
1	68U-42610-12-4D	TOP COWLING ASSY	1	
2	65W-42613-00-00	. .MOLDING, AIR DUCT	1	
3	97780-60520-00	. SCREW, TAPPING	4	
4	65W-42651-01-00	. .HOOK	1	
5	90109-06MA4-00	. .BOLT	2	
6	65W-42652-01-00	. HOOK	1	
7	90266-06M02-00	. ..RIVET	2	
8	6D5-42615-00-00	. SEAL	1	
9	68U-42678-10-00	. .GRAPHIC, REAR	1	
10	65W-W0070-20-00	. .GRAPHIC SET	1	
11	65W-42681-20-00	. .MARK, COWLING	1	
12	65W-42682-20-00	. .MARK, COWLING	1	
13	90202-05M38-00	. WASHER, PLATE	4	
14	95680-06100-00	. NUT, U	2	
15	65W-42677-00-00	. .GRAPHIC, FRONT	1	
16	67F-13434-03-00	LABEL, CAUTION	1	