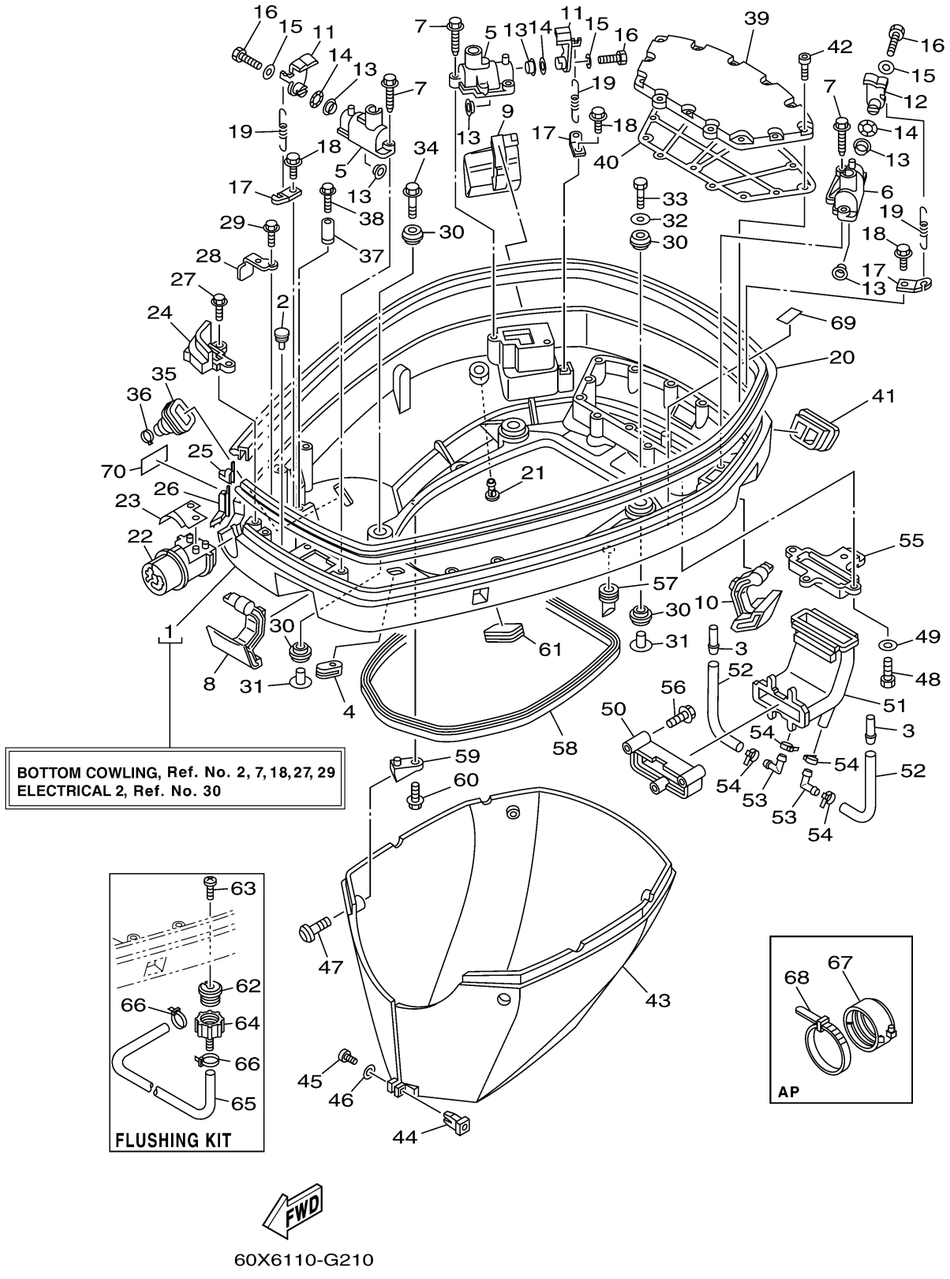


60X6110-G210

# BOTTOM COWLING

| Ref No. | Part Number | Description | Qty | Remarks |
|---|---|---|---|---|
| 1 | 60V-42710-10-8D | BOTTOM COWLING ASSY | 1 | |
| 2 | 6D0-42748-00-00 | GROMMET | 2 | |
| 3 | 6E5-24377-00-00 | PIPE, JOINT 2 | 2 | |
| 4 | 60V-42727-00-00 | GROMMET | 1 | |
| 5 | 68F-42828-03-94 | PLATE, CLAMP | 2 | |
| 6 | 68F-42828-10-94 | PLATE, CLAMP | 1 | |
| 7 | 90109-06M82-00 | BOLT | 6 | |
| 8 | 60V-42815-00-8D | LEVER, CLAMP | 1 | |
| 9 | 60V-42817-00-8D | LEVER, CLAMP | 1 | |
| 10 | 60V-42816-00-8D | LEVER, CLAMP | 1 | |
| 11 | 68F-42818-01-00 | LEVER, CLAMP | 2 | |
| 12 | 6D8-42818-00-00 | LEVER, CLAMP | 1 | |
| 13 | 90386-15M73-00 | BUSH | 6 | |
| 14 | 90206-15M18-00 | WASHER, WAVE | 3 | |
| 15 | 90201-06068-00 | WASHER, PLATE | 3 | |
| 16 | 97095-06016-00 | BOLT | 3 | |
| 17 | 64D-43144-00-00 | HOOK, SPRING | 3 | |
| 18 | 90109-06M80-00 | BOLT | 3 | |
| 19 | 90506-18M40-00 | SPRING, TENSION | 3 | |
| 20 | 6D0-42615-00-00 | SEAL | 1 | |

CONTINUED ON NEXT FRAME >

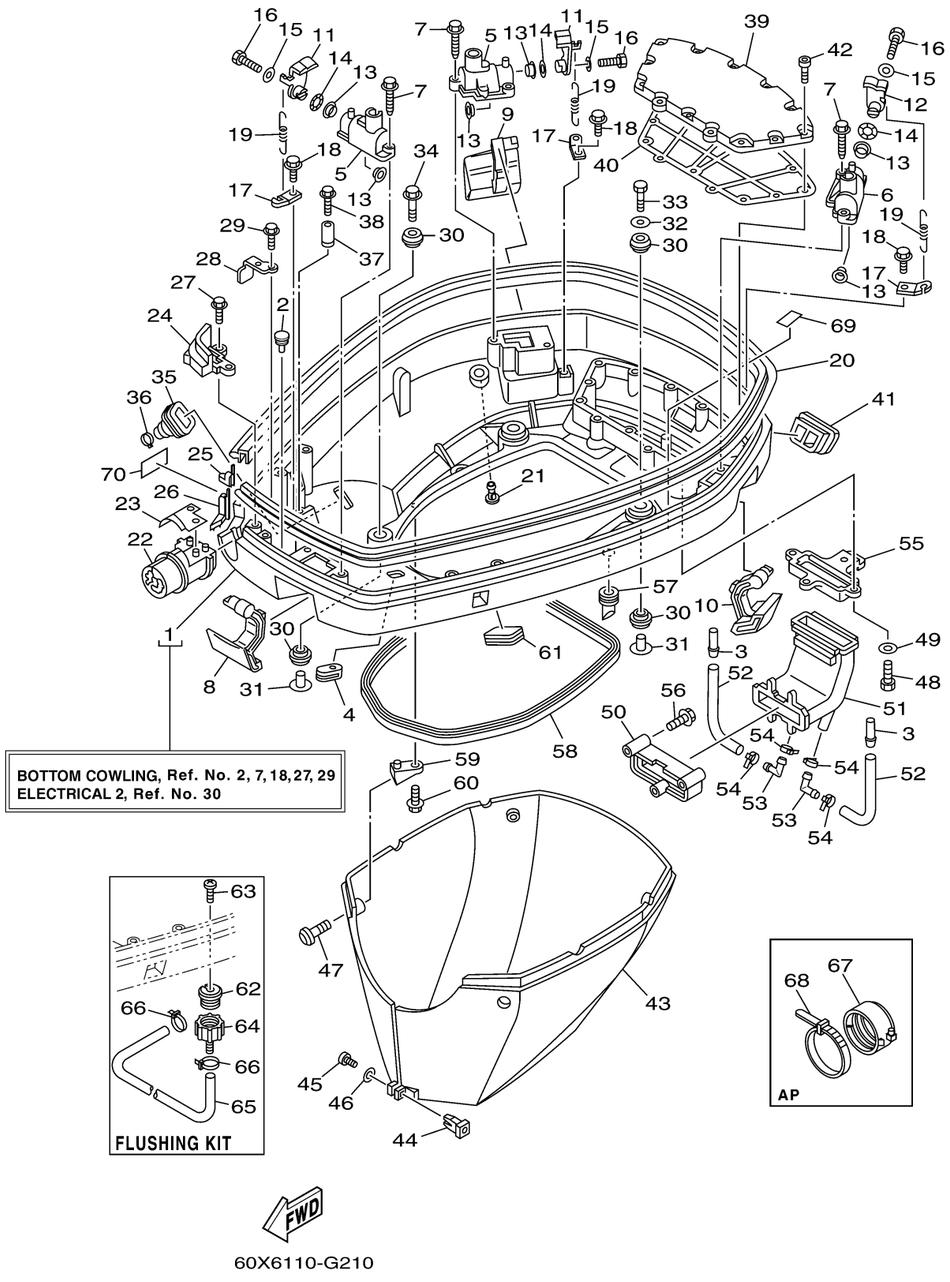


60X6110-G210

# BOTTOM COWLING

| Ref No. | Part Number | Description | Qty | Remarks |
|---|---|---|---|---|
| 21 | 60V-44391-00-00 | NIPPLE, HOSE | 1 | |
| 22 | 60V-42725-01-00 | GROMMET | 1 | |
| 23 | 6D0-42721-00-00 | GASKET 1 | 1 | |
| 24 | 60V-42738-02-8D | PLATE, FITTING | 1 | |
| 25 | 60V-42716-02-00 | RUBBER, SEAL 1 | 1 | |
| 26 | 60V-42717-01-00 | RUBBER, SEAL 2 | 1 | |
| 27 | 90109-06M81-00 | BOLT | 2 | |
| 28 | 64D-42738-10-8D | PLATE, FITTING | 1 | |
| 29 | 90109-06M81-00 | BOLT | 1 | |
| 30 | 90480-22M81-00 | GROMMET | 8 | |
| 31 | 90387-08M37-00 | COLLAR | 4 | |
| 32 | 90201-08M54-00 | WASHER, PLATE | 1 | |
| 33 | 97075-08035-00 | BOLT | 1 | |
| 34 | 90119-08M22-00 | BOLT, WITH WASHER | 3 | |
| 35 | 6C5-42724-00-00 | GROMMET | 1 | |
| 36 | 90465-11M10-00 | CLAMP | 1 | |
| 37 | 6E5-82588-00-00 | PLATE | 1 | |
| 38 | 95895-06020-00 | BOLT, FLANGE | 1 | |
| 39 | 60V-42723-00-5B | COVER, BOTTOM | 1 | |
| 40 | 60V-42721-A0-00 | GASKET 1 | 1 | |

CONTINUED ON NEXT FRAME >

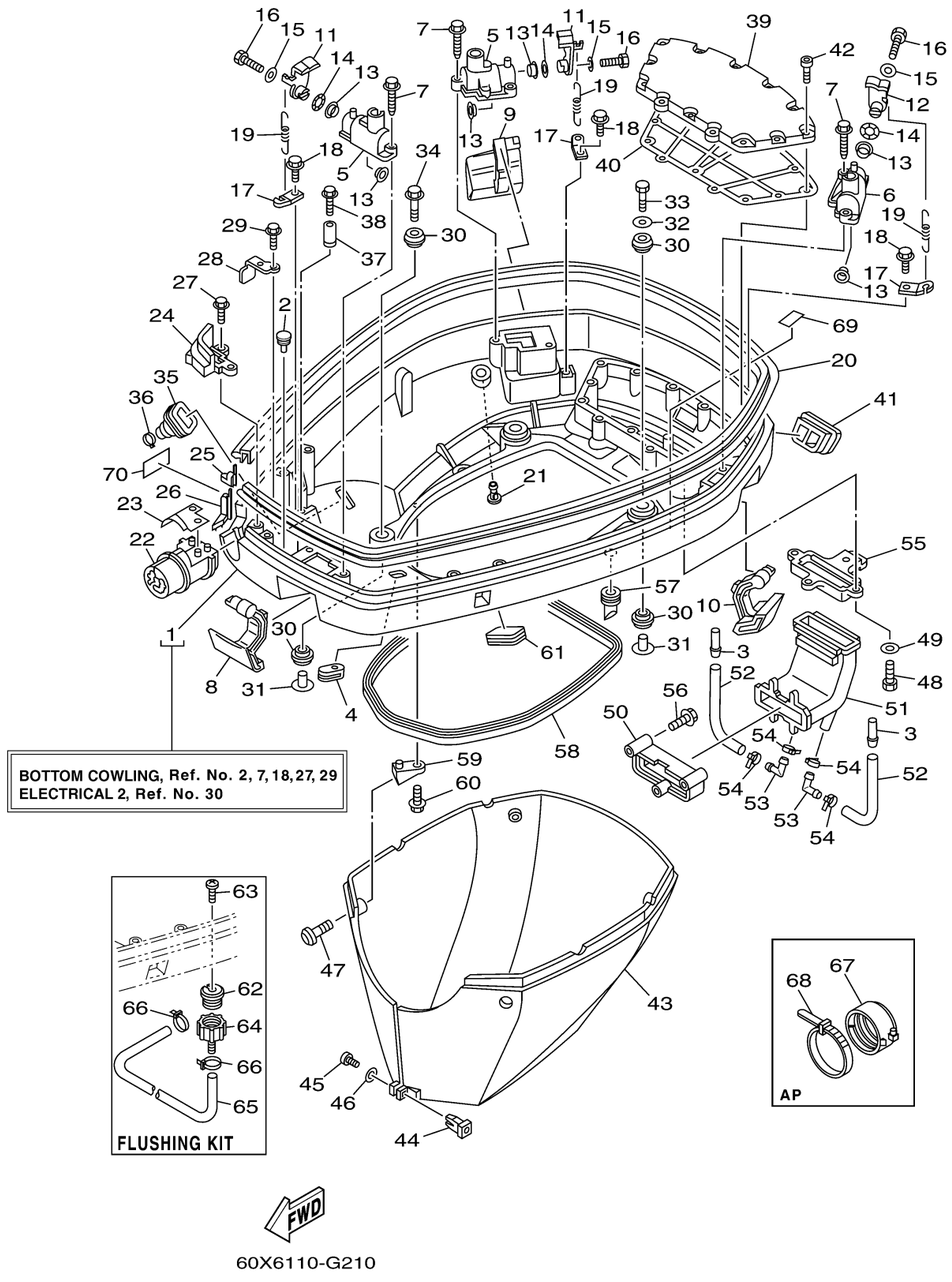


60X6110-G210

# BOTTOM COWLING

| Ref No. | Part Number | Description | Qty | Remarks |
|---|---|---|---|---|
| 41 | 60V-42718-00-00 | RUBBER, SEAL 3 | 1 | |
| 42 | 90110-06038-00 | BOLT, HEXAGON SOCKET HEAD | 13 | |
| 43 | 60V-42741-00-8D | APRON | 1 | |
| 44 | 60V-42756-00-00 | STAY, CLAMP | 1 | |
| 45 | 97880-04016-00 | SCREW, PAN HEAD | 1 | |
| 46 | 92990-04600-00 | WASHER, PLATE | 1 | |
| 47 | 90111-06034-00 | BOLT,HEX. SOCKET BUTTON | 4 | |
| 48 | 97095-06020-00 | BOLT | 4 | |
| 49 | 92995-06600-00 | WASHER | 4 | |
| 50 | 60V-12581-00-00 | JOINT, HOSE 1 | 1 | |
| 51 | 60V-12576-00-00 | HOSE 1 | 1 | |
| 52 | 60V-12588-00-00 | HOSE 5 | 2 | |
| 53 | 60X-24376-00-00 | PIPE, JOINT 1 | 2 | |
| 54 | 90465-11M10-00 | CLAMP | 4 | |
| 55 | 60V-42771-00-00 | APRON | 1 | |
| 56 | 97575-08555-00 | BOLT, WITH WASHER | 3 | |
| 57 | 6D0-42717-00-00 | RUBBER, SEAL 2 | 4 | |
| 58 | 61A-42716-00-00 | RUBBER, SEAL 1 | 1 | |
| 59 | 60V-42774-00-00 | STAY, APRON 1 | 4 | |
| 60 | 95895-06016-00 | BOLT, FLANGE | 4 | |

CONTINUED ON NEXT FRAME >

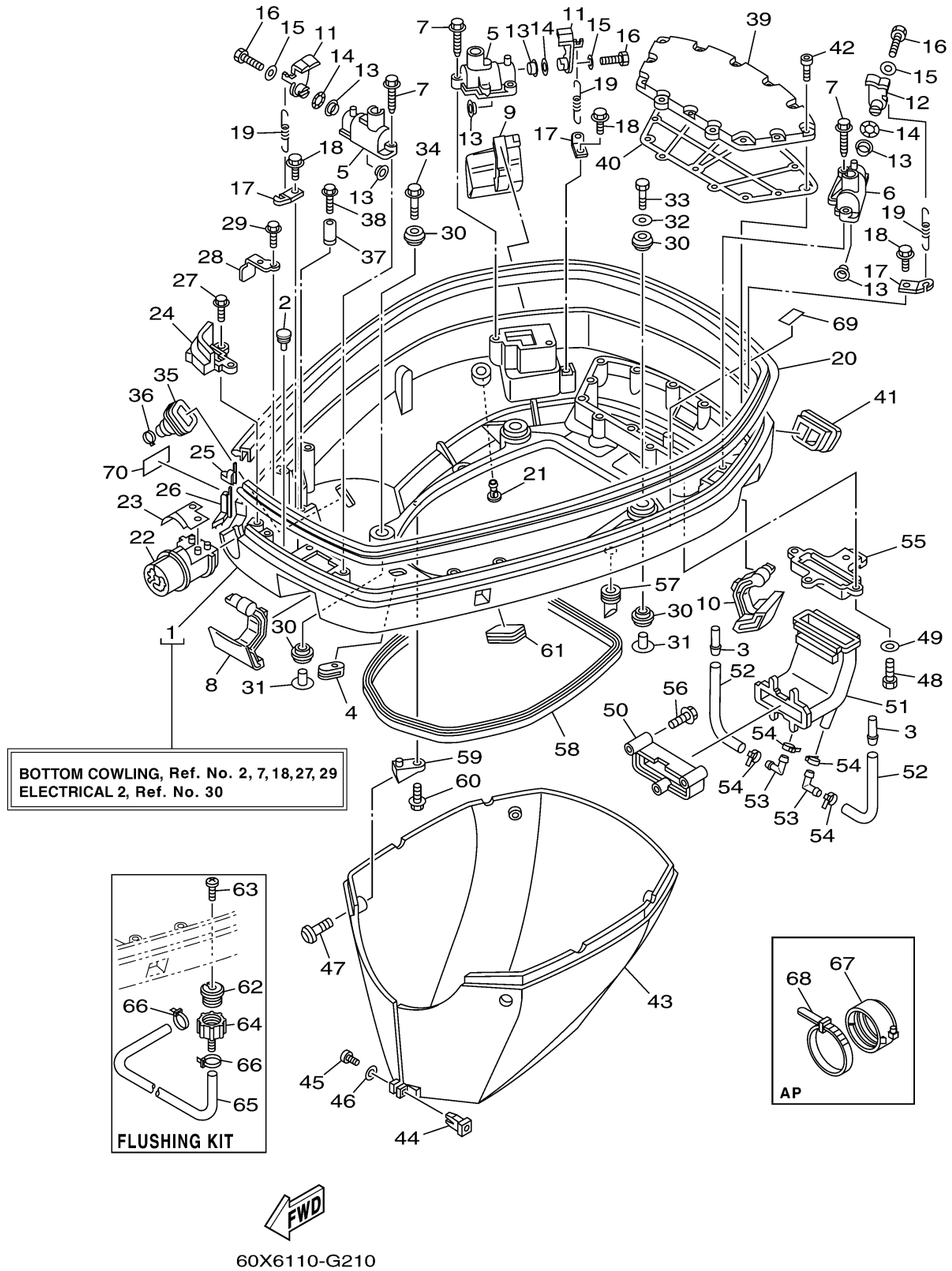


60X6110-G210

# BOTTOM COWLING

| Ref No. | Part Number | Description | Qty | Remarks |
|---|---|---|---|---|
| 61 | 6H4-42726-00-00 | GROMMET | 1 | |
| 62 | 6R3-12572-00-00 | .ADAPTER | 1 | FLUSHING KIT |
| 63 | 90169-05M00-00 | SCREW, TRUSS HEAD TAPPING | 1 | FLUSHING KIT |
| 64 | 6R3-12580-00-00 | .JOINT ASSY | 1 | FLUSHING KIT |
| 65 | 90445-11M36-00 | HOSE (L: 620) | 1 | FLUSHING KIT |
| 66 | 90465-11M10-00 | CLAMP | 2 | FLUSHING KIT |
| 67 | 68F-42753-00-00 | FASTNER | 1 | AP |
| 68 | 90464-20258-00 | CLAMP | 1 | AP |
| 69 | 68H-42791-01-00 | MARK 1 | 1 | |
| 70 | 60V-2415E-40-00 | LABEL, CAUTION | 1 | |