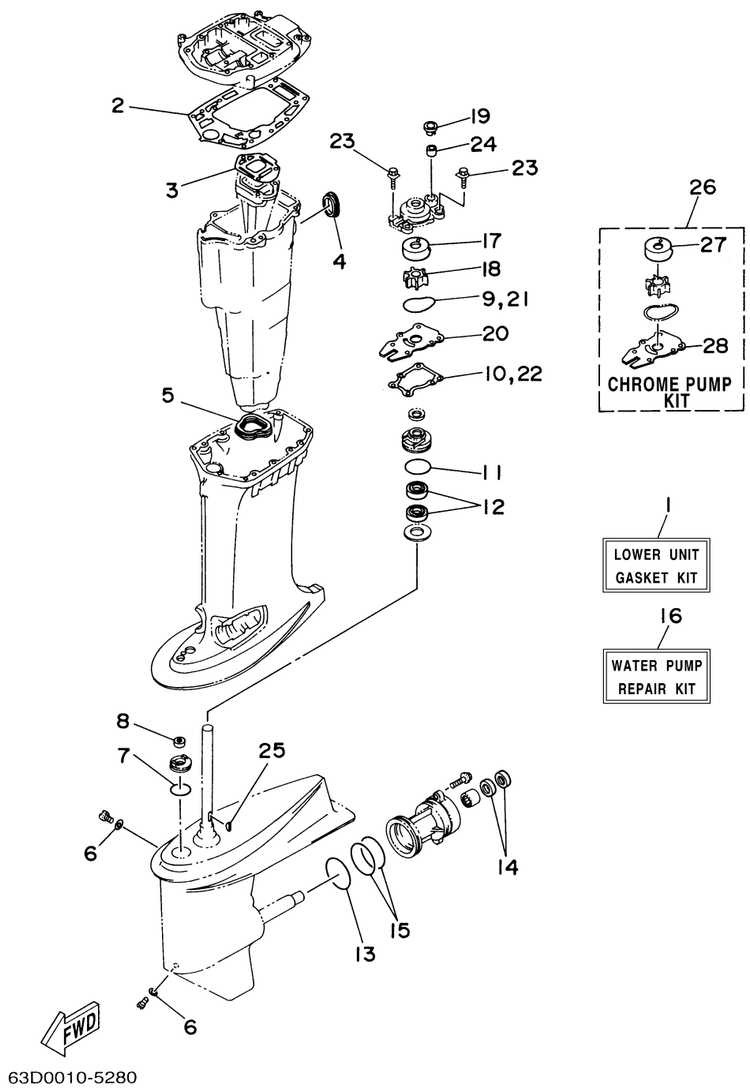

REPAIR KIT 2

Ref No.	Part Number	Description	Qty	Remarks
1	63D-W0001-20-00	LOWER UNIT GASKET KIT	1	
2	63D-45114-A0-00	. .GASKET, UPPER CASING	1	
3	6H4-41134-A0-00	. GASKET, EXHAUST MANIFOLD	1	
4	6H3-45127-00-00	. SEAL	1	
5	63D-45123-00-00	. .GASKET, MUFFLER	1	
6	90430-08020-00	. .GASKET	2	
7	93210-33MG4-00	. .O-RING	1	
8	93106-09014-00	. .OIL SEAL	1	
9	93210-59MG7-00	. .O-RING	1	
10	63D-44316-00-00	. .GASKET, WATER PUMP	1	
11	93210-48MG8-00	. O-RING	1	
12	93101-25M57-00	. .OIL SEAL	2	
13	93210-69MG6-00	. .O-RING	1	
14	93101-22M00-00	. .OIL SEAL	2	
15	93210-74MG5-00	. .O-RING	2	
16	63D-W0078-01-00	WATER PUMP REPAIR KIT	1	
17	63D-44322-00-00	. .INSERT, CARTRIDGE	1	
18	6H3-44352-00-00	. .IMPELLER	1	
19	63D-44312-00-00	. .COVER, WATER PUMP HOUSING	1	
20	63D-44323-00-00	. .OUTER PLATE, CARTRIDGE	1	

CONTINUED ON NEXT FRAME >

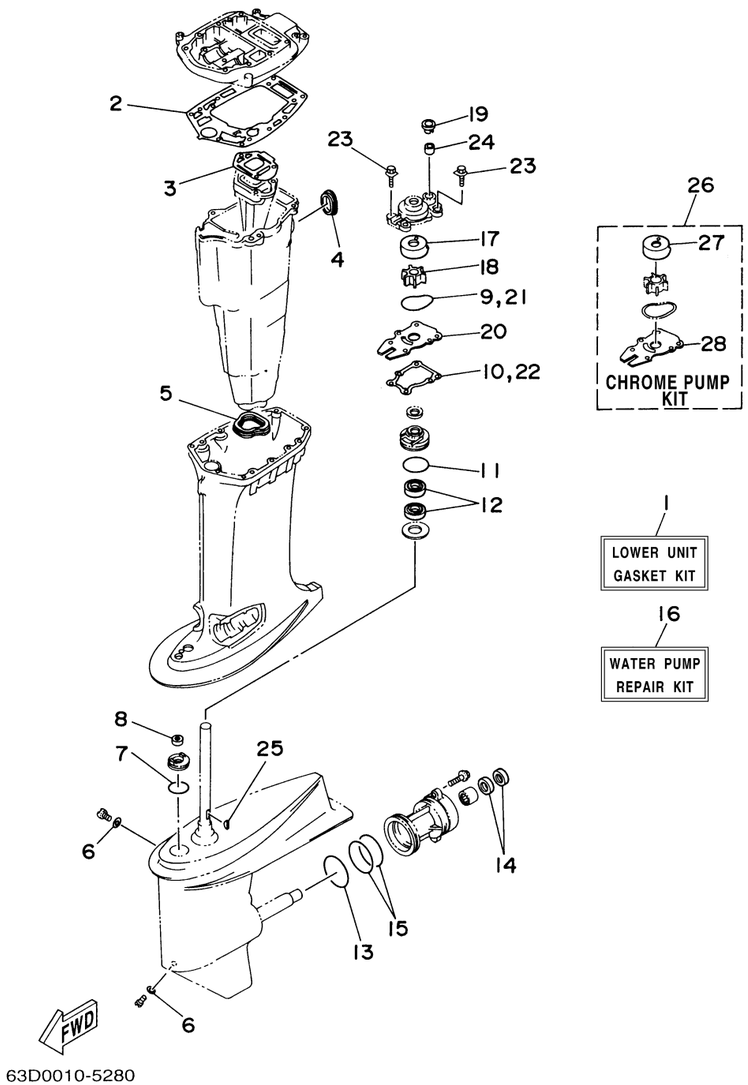

REPAIR KIT 2

Ref No.	Part Number	Description	Qty	Remarks
21	93210-59MG7-00	. .O-RING	1	
22	63D-44316-00-00	. .GASKET, WATER PUMP	1	
23	90119-08M15-00	. .BOLT, WITH WASHER	4	
24	663-44366-00-00	. DAMPER, WATER SEAL 2	1	
25	90280-03024-00	. .KEY, WOODRUFF	1	
26	63D-W0078-0A-00	CHROME PUMP KIT	1	
27	63D-44322-40-00	. .INSERT, CARTRIDGE	1	
28	63D-44323-40-00	. .OUTER PLATE, CARTRIDGE	1	