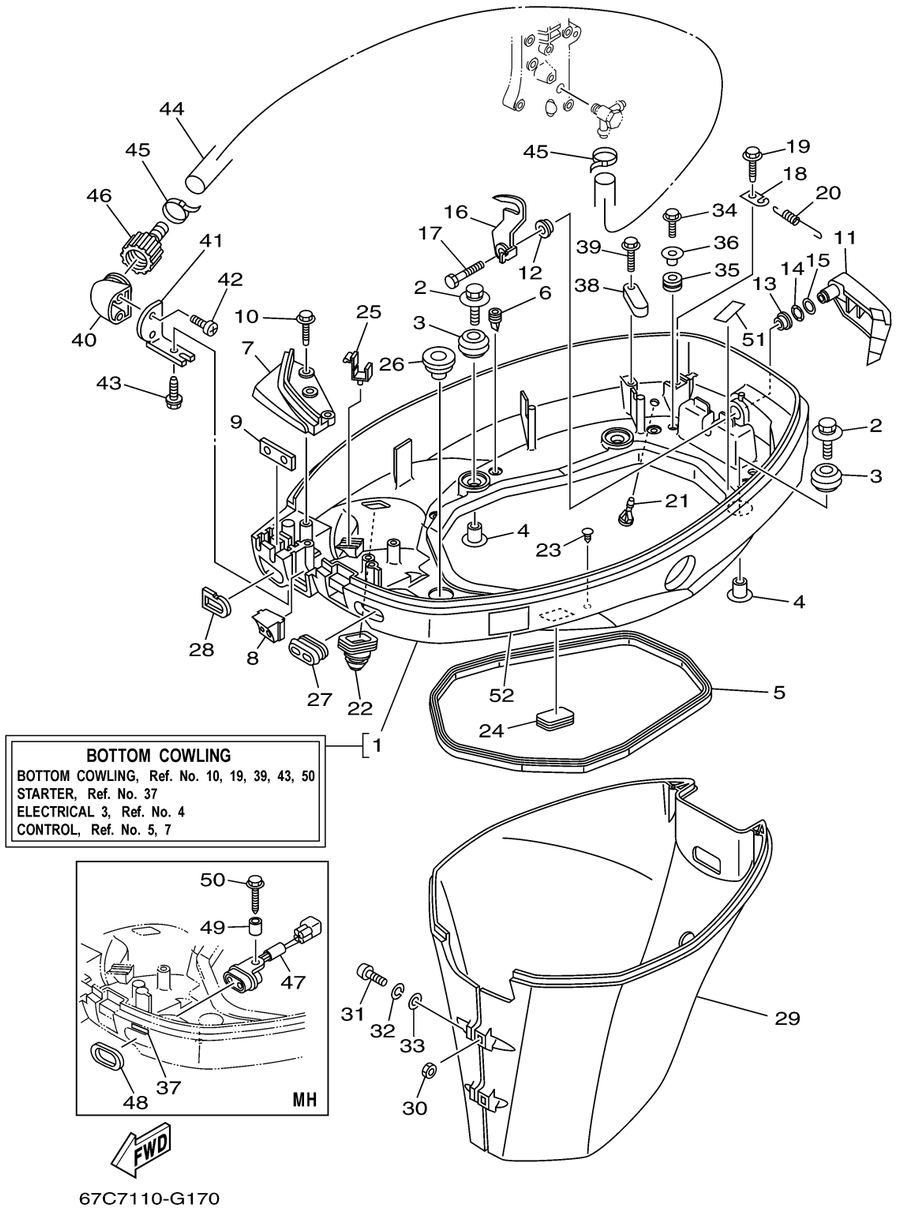

67C7110-G170

BOTTOM COWLING

Ref No.	Part Number	Description	Qty	Remarks
1	67C-42710-12-4D	BOTTOM COWLING ASSY	0	WITH TAPPING BOLT
1	67C-42710-02-4D	BOTTOM COWLING ASSY	1	WITH TAPPING BOLT
2	90119-06M08-00	BOLT, WITH WASHER	4	
3	90480-09M12-00	GROMMET	4	
4	90387-06060-00	COLLAR	4	
5	62Y-42716-00-00	RUBBER, SEAL 1	1	
6	65W-42717-00-00	RUBBER, SEAL 2	4	
7	67C-42738-00-4D	PLATE, FITTING	1	
8	67C-42725-00-00	GROMMET	1	
8	62Y-42725-30-00	GROMMET	0	
8	62Y-42725-00-00	GROMMET	0	
9	62Y-42727-00-00	GROMMET	1	
10	90109-06M81-00	.BOLT	3	
11	67C-42815-00-4D	LEVER, CLAMP	1	
12	90386-12M37-00	BUSH	1	
13	90386-12MA2-00	BUSH	1	
14	90206-12052-00	WASHER, WAVE	1	
15	90201-12M07-00	WASHER, PLATE	1	
16	67C-42816-01-00	LEVER, CLAMP	1	
17	97095-06012-00	BOLT	1	

CONTINUED ON NEXT FRAME >

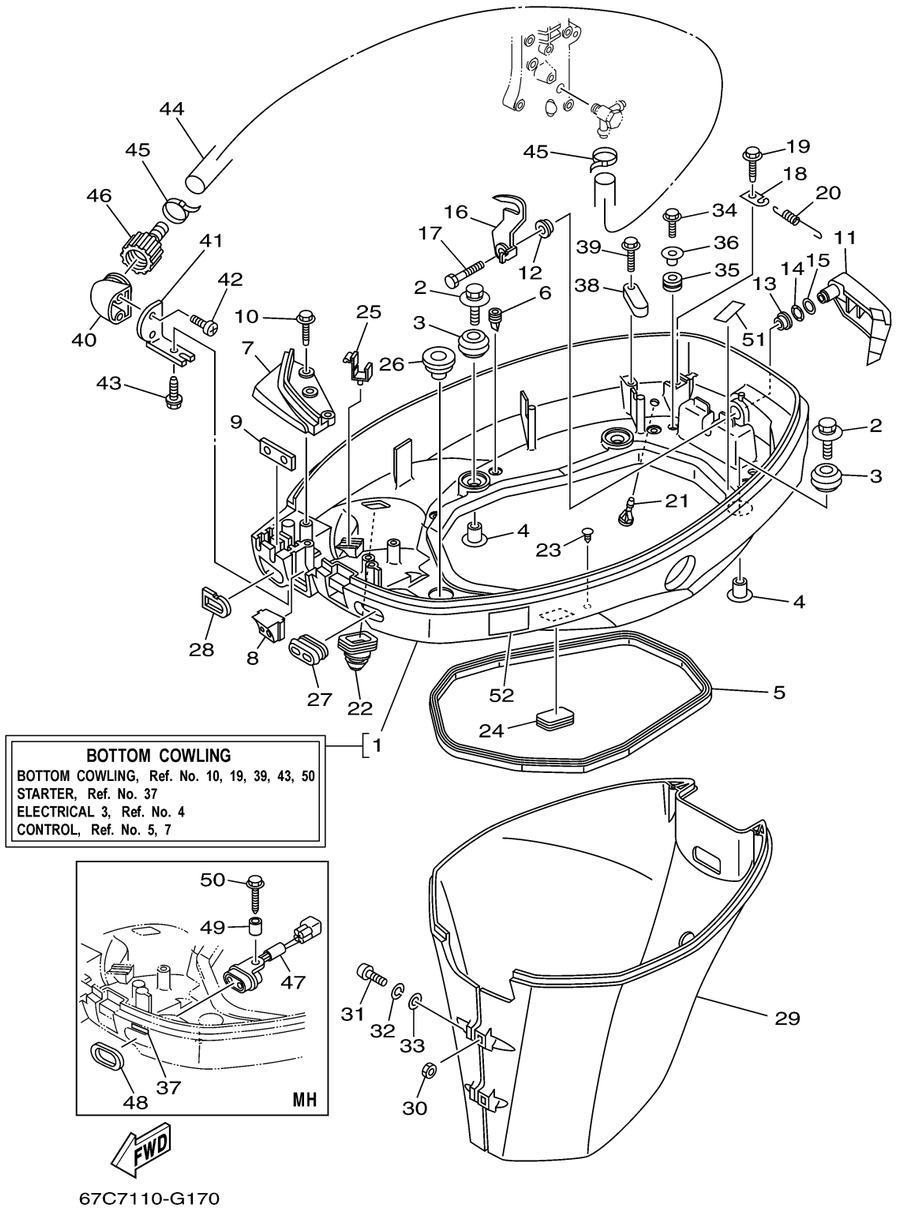

BOTTOM COWLING

Ref No.	Part Number	Description	Qty	Remarks
18	66T-43144-00-00	HOOK, SPRING	1	
19	90109-06M86-00	.BOLT	1	
20	90506-18M40-00	SPRING, TENSION	1	
21	6H3-44391-01-00	NIPPLE, HOSE	1	
22	65W-42724-10-00	GROMMET	1	FLUSHING KIT
22	6H1-42726-21-00	GROMMET	0	FLUSHING KIT
23	90338-07004-00	PLUG	1	
24	6H4-42726-00-00	GROMMET	1	
25	90464-09M13-00	CLAMP	1	
26	676-42727-00-00	GROMMET	1	
27	6H3-42727-00-00	GROMMET	0	
28	61N-24329-00-00	SEAL	1	
29	67C-42741-10-4D	APRON	1	L(21.0")
29	67C-42741-00-4D	APRON	0	S(16.1")
30	95380-06600-00	NUT, HEXAGON	2	
31	97880-06025-00	SCREW, PAN HEAD	2	
32	92990-06100-00	WASHER, SPRING	2	
33	92990-06600-00	.WASHER, PLATE	2	
34	90109-06M80-00	BOLT	2	
35	90480-13M24-00	GROMMET	2	

CONTINUED ON NEXT FRAME >

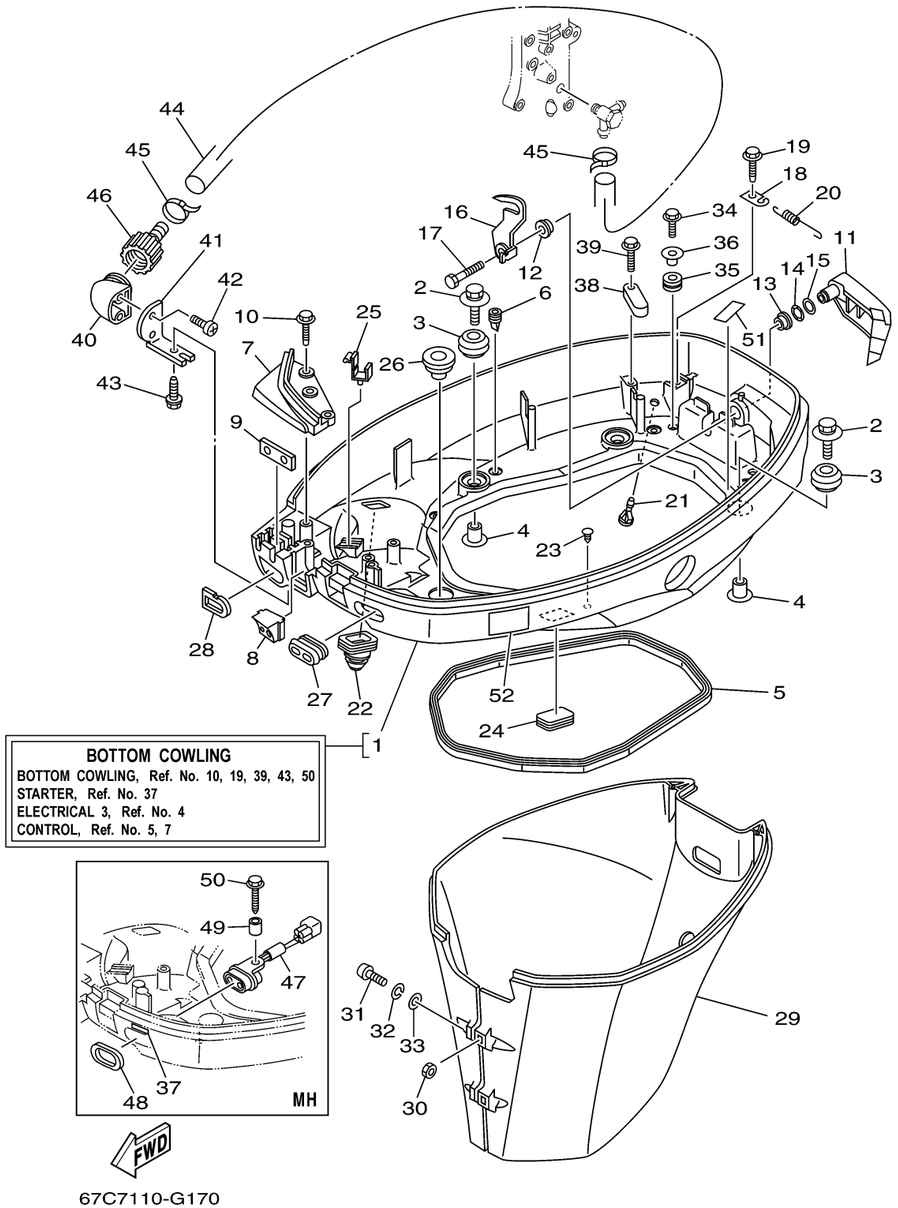

BOTTOM COWLING

Ref No.	Part Number	Description	Qty	Remarks
36	90387-06M43-00	COLLAR	2	
37	67C-85415-00-00	MARK, SIGNAL LAMP	1	
38	6E5-82588-00-00	PLATE	1	
39	90109-06M81-00	.BOLT	1	
40	68T-12572-00-00	ADAPTER	1	FLUSHING KIT
41	69W-12535-00-00	PLATE	1	FLUSHING KIT
42	90167-06002-00	SCREW, TAPPING	2	FLUSHING KIT
43	90109-06M80-00	BOLT	1	FLUSHING KIT
44	67C-24312-00-00	PIPE 2	1	FLUSHING KIT
45	90465-11M10-00	CLAMP	2	FLUSHING KIT
46	6R3-12580-00-00	.JOINT ASSY	1	FLUSHING KIT
47	62Y-84301-00-00	PILOT LIGHT ASSY 1	1	
48	6H4-83589-00-00	GASKET	1	
49	90387-06M87-00	COLLAR	1	
50	90109-06MA2-00	BOLT	1	
51	62Y-82377-00-00	LABEL	1	
52	6AH-42794-40-00	LABEL, WARNING (GENERAL)	1	