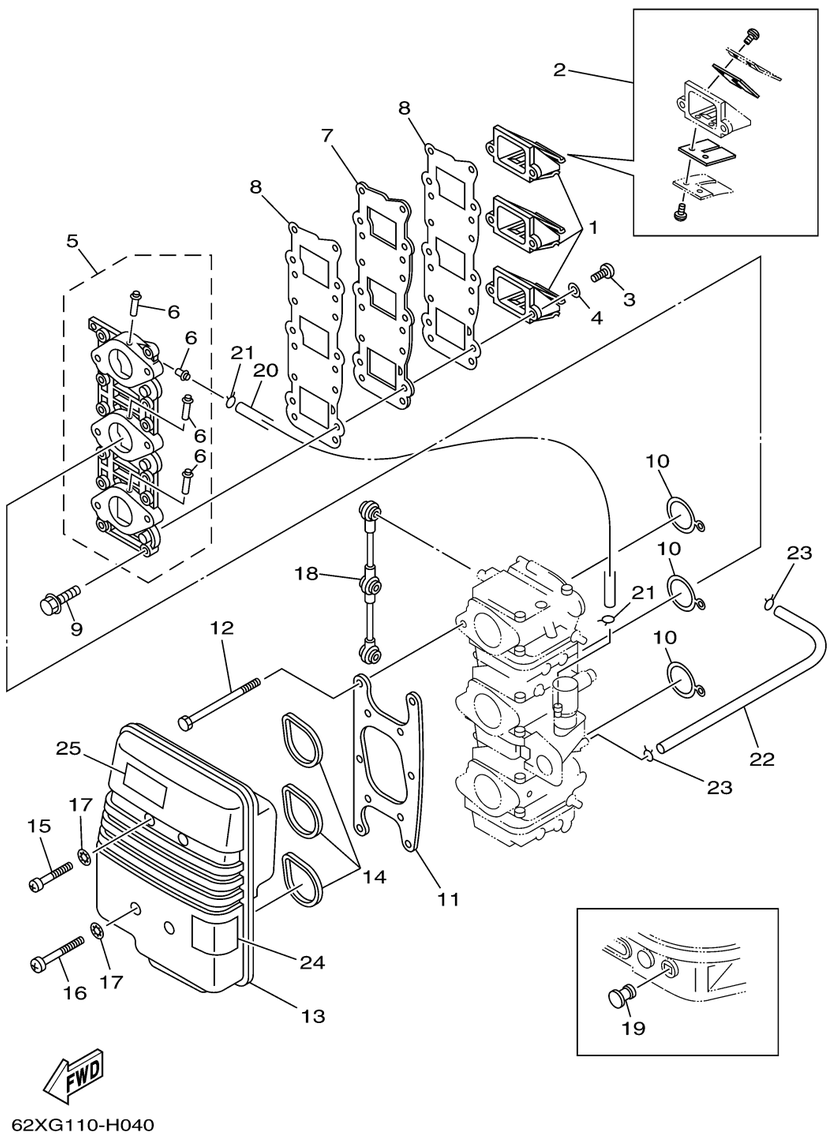

INTAKE

Ref No.	Part Number	Description	Qty	Remarks
1	6H5-13610-00-00	REED VALVE ASSY	3	
2	6H4-W0004-00-00	. .REED SET	1	
3	97880-05014-00	.SCREW, PAN HEAD	6	
4	92990-05600-00	WASHER, PLATE	6	
5	6H4-13641-12-94	MANIFOLD 1	1	
6	6H1-14485-00-00	. .PIPE, JOINT	4	
7	6H4-13624-01-94	PLATE,REED VALVE	1	
8	6H4-13621-A1-00	GASKET, VALVE SEAT	2	
9	90119-06MA2-00	BOLT, WITH WASHER	12	
10	6H4-14198-01-00	.GASKET	3	
11	6H4-14406-00-00	HINGE	1	
12	97095-06095-00	BOLT	6	
13	6H4-14431-02-00	SILENCER, INTAKE 1	1	
14	6H3-14457-01-00	SEAL	3	
15	97885-06040-00	SCREW, PAN HEAD	2	
16	97885-06055-00	SCREW, PAN HEAD	2	
17	90209-06M05-00	WASHER	4	
18	6H4-41217-01-00	ROD, ACCEL. LEVER	1	
19	6G1-42748-00-00	GROMMET	1	
20	90445-07MA5-00	HOSE (L150)	1	

CONTINUED ON NEXT FRAME >

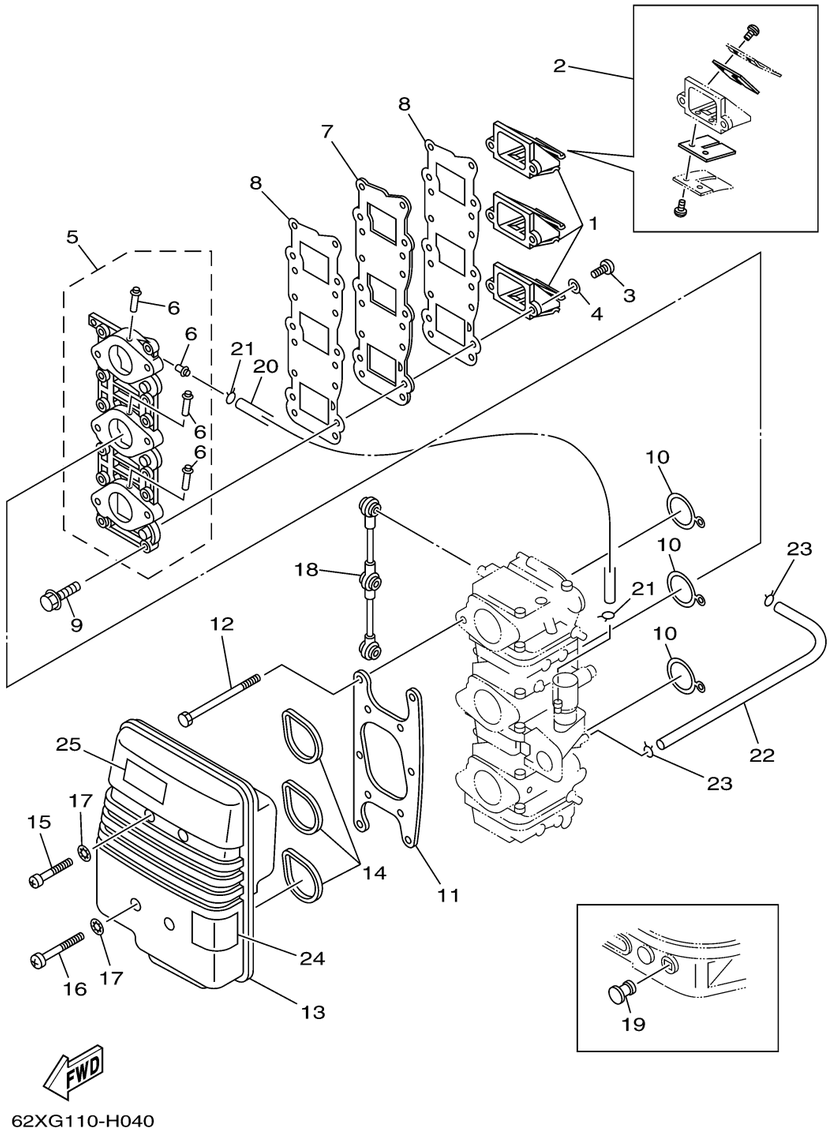

INTAKE

Ref No.	Part Number	Description	Qty	Remarks
21	90467-06016-00	CLIP	2	
22	6H3-14349-00-00	.PIPE	1	
23	90467-08004-00	CLIP	2	
24	6H1-85711-60-00	MARK, CAUTION	1	
25	6AH-81994-40-00	LABEL, SAFETY	1	