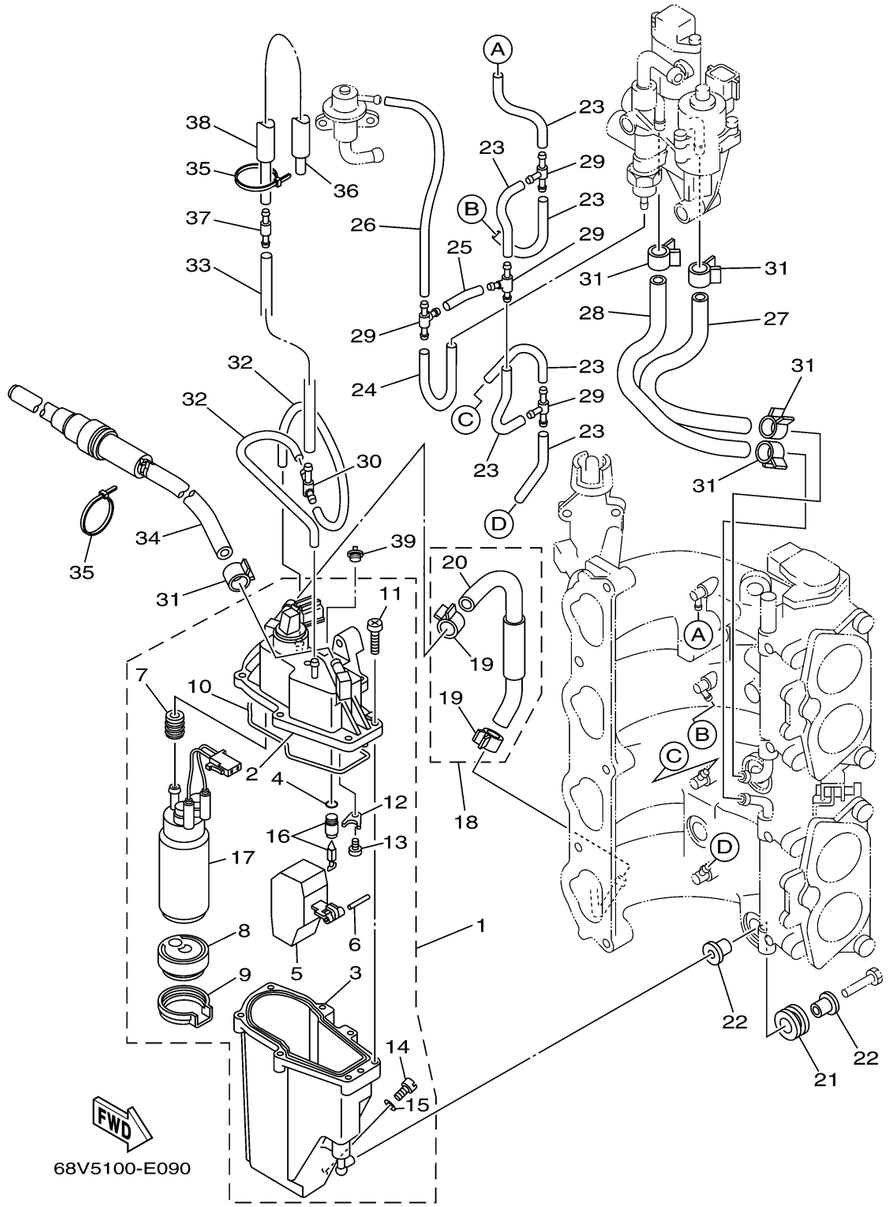

FUEL INJECTION PUMP

Ref No.	Part Number	Description	Qty	Remarks
1	68V-14180-03-00	FLOAT CHAMBER ASSY	1	
2	68V-14182-01-00	. .COVER, FLOAT CHAMBER	1	
3	68V-14181-00-00	. BODY, FLOAT CHAMBER 1	1	
4	68V-13769-00-00	. O-RING	1	
5	68V-14985-00-00	. .FLOAT	1	
6	68V-14386-00-00	. .PIN, FLOAT	1	
7	68V-13781-10-00	. .DAMPER, PUMP	1	
8	68V-13915-00-00	. FILTER	1	
9	68V-13784-00-00	. COVER, PUMP	1	
10	68V-14984-00-00	. GASKET, FLOAT CHAMBER	1	
11	68V-14567-00-00	. SCREW	7	
12	68V-14255-00-00	. PLATE	1	
13	68V-14592-00-00	. .SCREW	1	
14	68V-14191-00-00	. .PLUG, DRAIN	1	
15	68V-14126-00-00	. .GASKET	1	
16	68V-14546-00-00	. .VALVE, NEEDLE	1	
17	68V-13907-03-00	. .FUEL PUMP COMP.	1	
18	68V-14807-11-00	HOSE COMP.	1	
19	68V-13577-00-00	. CLIP	2	
20	68V-13973-10-00	. .PIPE, FUEL 3	1	

CONTINUED ON NEXT FRAME >

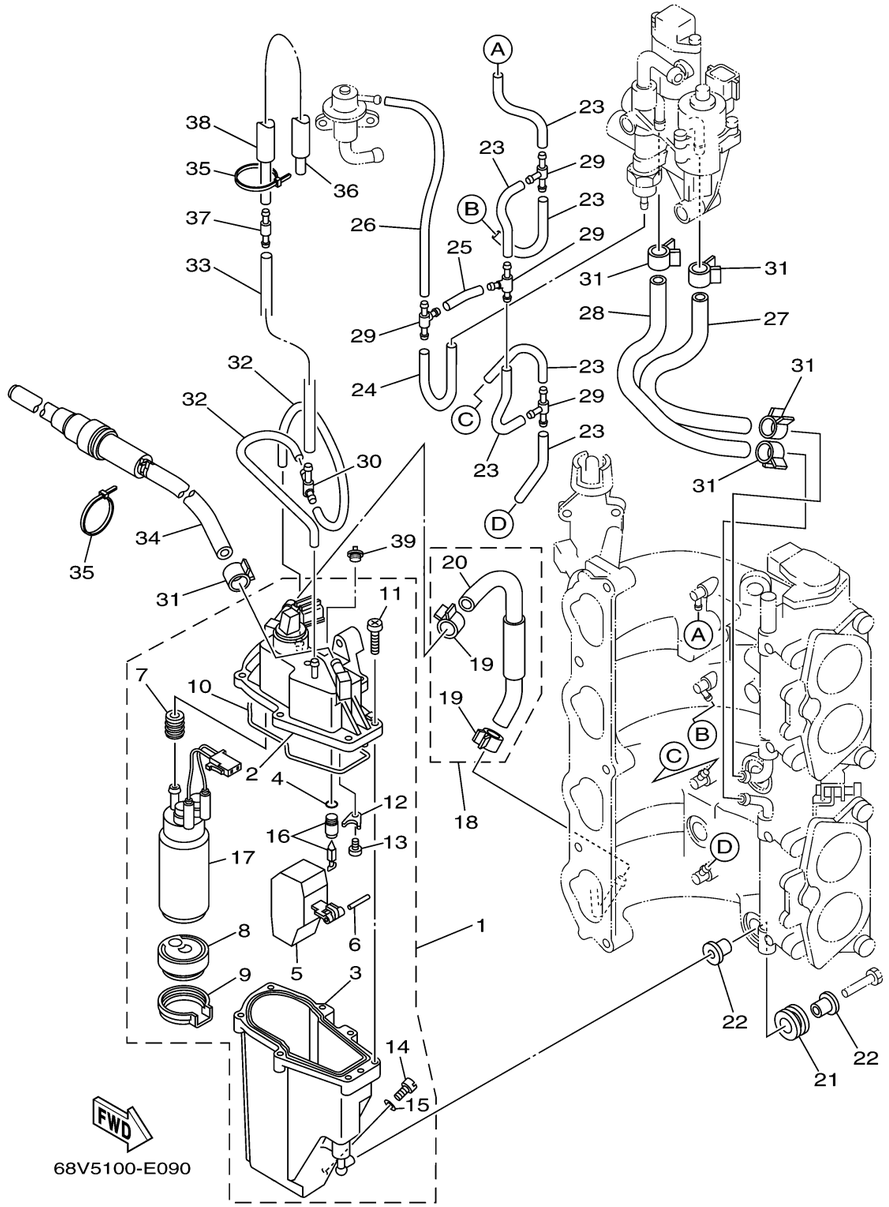

FUEL INJECTION PUMP

Ref No.	Part Number	Description	Qty	Remarks
21	68V-13593-00-00	DAMPER	3	
22	68V-13716-00-00	COLLAR	6	
23	68V-13542-00-00	HOSE, VACUUM SENSING 1	6	
24	68V-13533-00-00	.HOSE, VACUUM SENSING 4	1	
25	68V-13544-00-00	HOSE, VACUUM SENSING 2	1	
26	68V-13532-01-00	HOSE, VACUUM SENSING 3	1	
27	68V-13545-00-00	HOSE 1	1	
28	68V-13546-00-00	HOSE 2	1	
29	68V-24377-00-00	PIPE, JOINT 2	4	
30	68V-24379-00-00	PIPE, JOINT 4	1	
31	68V-13577-00-00	CLIP	5	
32	68V-13534-00-00	HOSE, VACUUM SENSING 5	2	
33	68V-13547-01-00	HOSE 3	1	
34	68V-24502-02-00	FILTER, FUEL	1	
35	68V-2481H-00-00	CLAMP	2	
36	68V-13535-00-00	HOSE, VACUUM SENSING 5	1	
37	68V-24460-01-00	RELIEF VALVE ASSY	1	
38	68V-13543-01-00	HOSE, AIR	1	
39	69J-14225-01-00	.CAP	1	