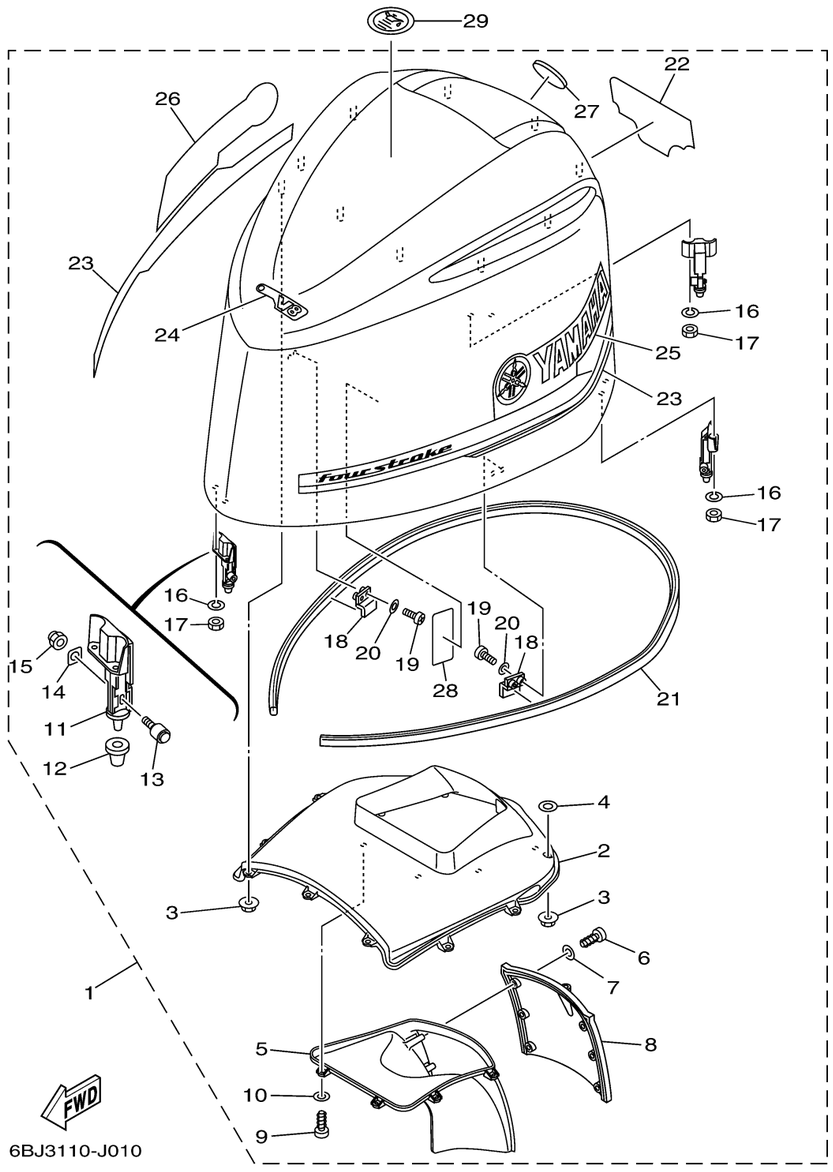

TOP COWLING

Ref No.	Part Number	Description	Qty	Remarks
1	6BJ-42610-20-8D	TOP COWLING ASSY	1	
2	6AW-42613-00-00	. ..MOLDING, AIR DUCT	1	
3	90179-06M28-00	. NUT	10	
4	90202-06003-00	. .WASHER, PLATE	3	
5	6AW-42635-00-00	. ..DUCT, WATER SEPARATOR	1	
6	97780-60516-00	. ..SCREW, TAPPING	6	
7	92995-06200-00	. ..WASHER	6	
8	6AW-42532-00-00	. ..COVER	1	
9	97780-60516-00	. ..SCREW, TAPPING	7	
10	92995-06200-00	. ..WASHER	7	
11	6AW-42647-00-9S	. ..HOLDER, CLAMP BAND	3	
12	6AW-42663-00-00	. ..DAMPER	3	
13	6AW-4264A-00-00	. ..HOOK ASSY	3	
14	6AW-42646-10-00	. ..PLATE, CLAMP	3	
15	95780-08300-00	. ..NUT, FLANGE	3	
16	92990-06100-00	. WASHER, SPRING	6	
17	95380-06600-00	. NUT, HEXAGON	6	
18	6AW-42477-00-00	. ..PLATE, LOCK	2	
19	97885-05010-00	. ..SCREW, PAN HEAD	4	
20	92995-05600-00	. WASHER	4	

CONTINUED ON NEXT FRAME >

TOP COWLING

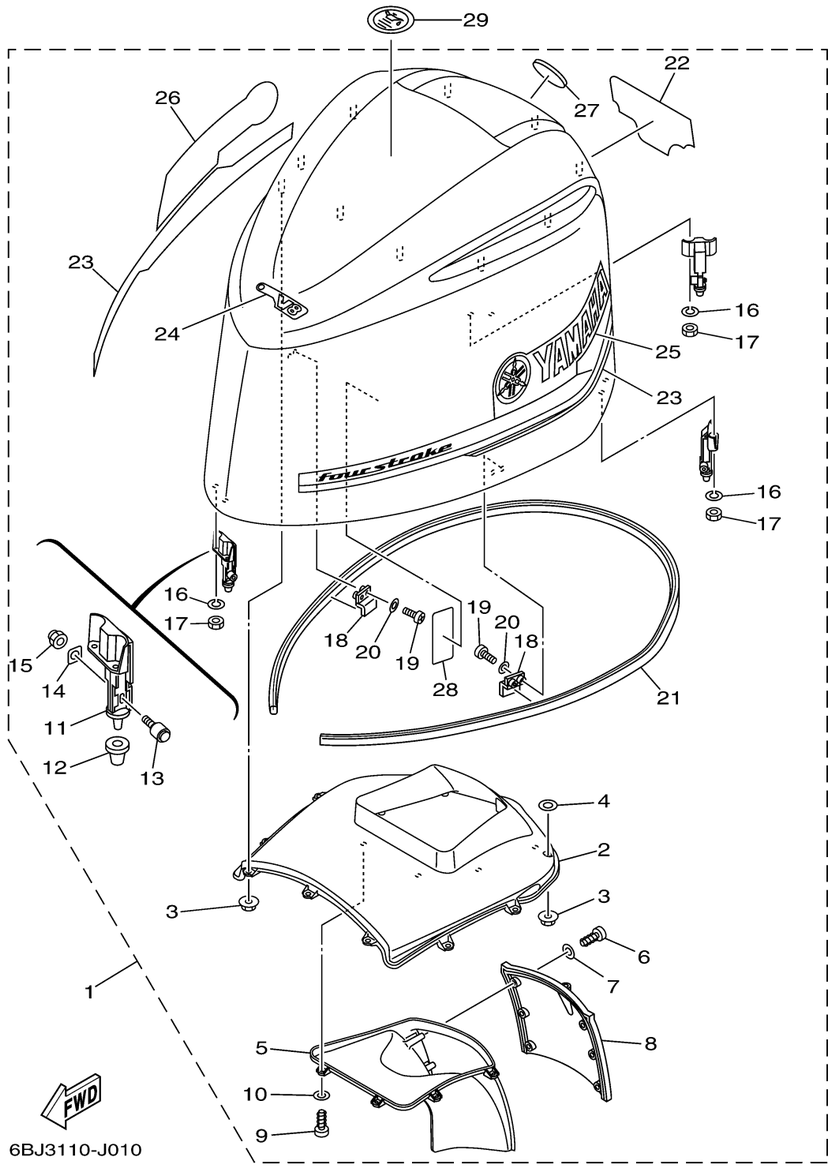

Ref No.	Part Number	Description	Qty	Remarks
21	6AW-42628-20-00	. ..SEAL	1	
22	6BJ-42678-00-00	. .GRAPHIC, REAR	1	
23	6AW-W0070-00-00	. .GRAPHIC SET	1	
24	6AW-42677-00-00	. .GRAPHIC, FRONT	1	
25	6AW-42681-00-00	. .MARK, COWLING	1	
26	6AW-42682-00-00	. .MARK, COWLING	1	
27	6AW-42697-10-00	. ..TUNING FORK MARK	1	
28	6AH-42735-00-00	. ..PROTECTOR	1	
29	67F-13434-10-00	LABEL, CAUTION	1	