CRANKSHAFT PISTON

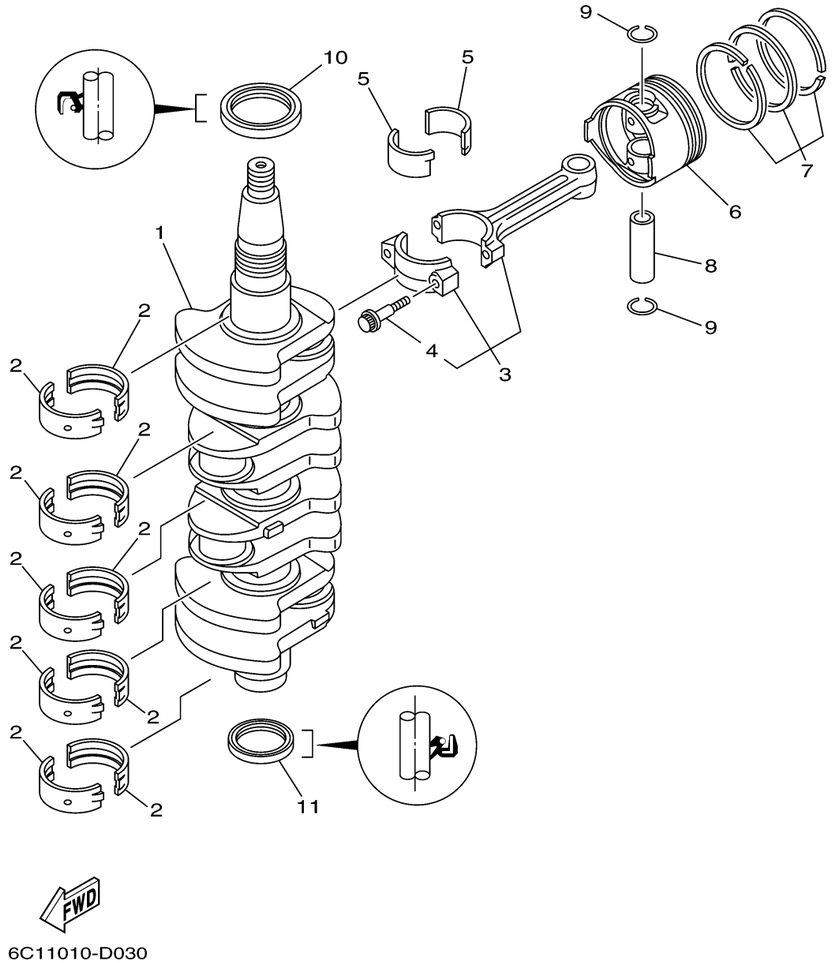

6C11010-D030

Ref No.	Part Number	Description	Qty	Remarks
1	6C5-11411-00-00	CRANKSHAFT	1	
2	6C5-11416-20-00	PLANE BEARING, CRANKSHAFT 1	10	UR PINK
2	6C5-11416-30-00	PLANE BEARING, CRANKSHAFT 1	10	UR GREEN
2	6C5-11416-10-00	PLANE BEARING, CRANKSHAFT 1	10	UR RED
2	6C5-11416-00-00	PLANE BEARING, CRANKSHAFT 1	10	UR YELLOW
3	6C5-11650-00-00	CONNECTING ROD ASSY	4	
4	6C5-11654-00-00	. .BOLT, CONNECTING ROD	2	
5	6C5-11656-10-00	PLANE BEARING, CONNECTING ROD	8	UR RED
5	6C5-11656-00-00	PLANE BEARING, CONNECTING ROD	8	UR YELLOW
5	6C5-11656-20-00	PLANE BEARING, CONNECTING ROD	8	UR PINK
5	6C5-11656-30-00	PLANE BEARING, CONNECTING ROD	8	UR GREEN
6	69W-11636-01-00	PISTON (0.50MM O/S)	4	AP
6	69W-11635-01-00	PISTON (0.25MM O/S)	4	AP
6	69W-11631-01-97	PISTON (STD)	4	
7	67C-11603-00-00	PISTON RING SET (STD)	4	
7	67C-11604-00-00	PISTON RING SET (0.25MM O/S)	4	AP
7	67C-11605-00-00	PISTON RING SET (0.50MM O/S)	4	AP
8	62Y-11633-00-00	PIN, PISTON	4	
9	93450-17129-00	.CIRCLIP	8	
10	93102-43M42-00	.OIL SEAL	1	

CONTINUED ON NEXT FRAME >

CRANKSHAFT PISTON

Ref No.	Part Number	Description	Qty	Remarks
11	93101-35002-00	.OIL SEAL	1	

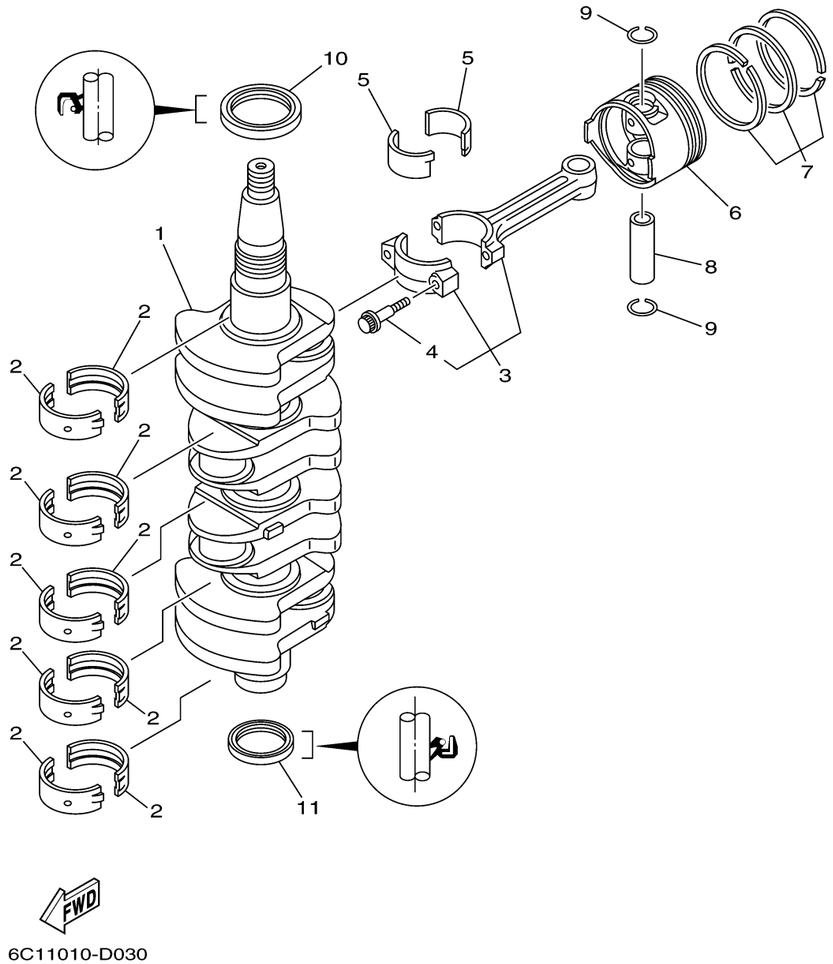

6C11010-D030