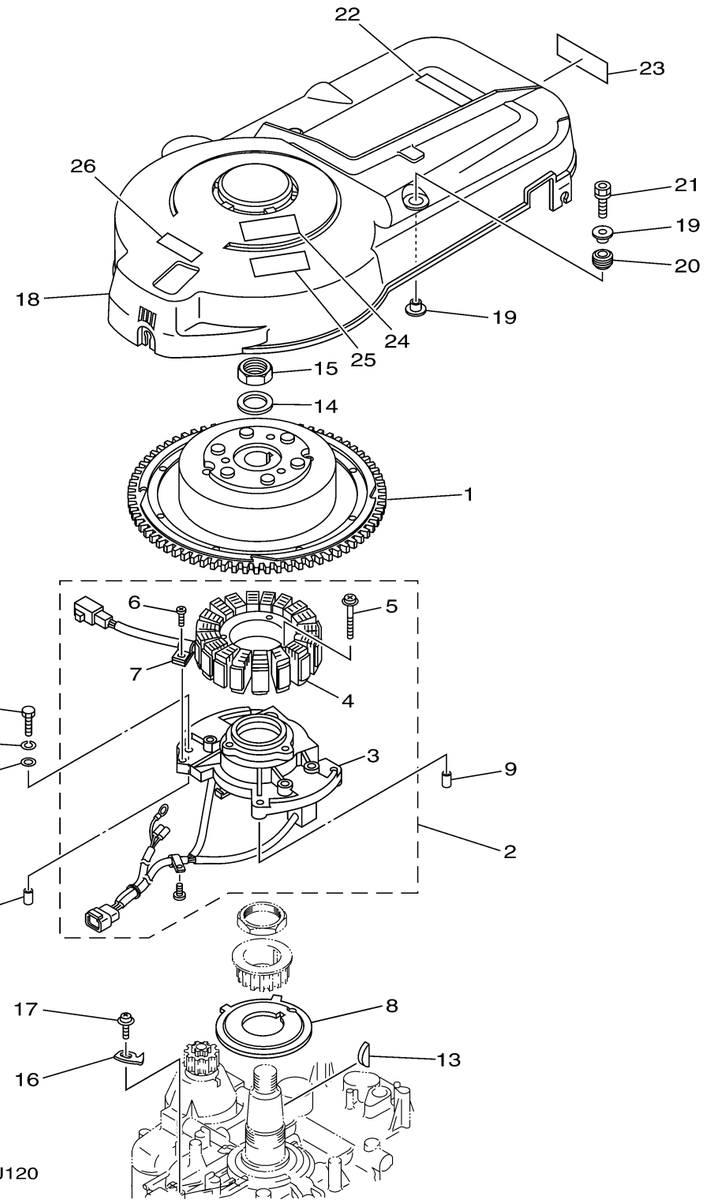

GENERATOR

Ref No.	Part Number	Description	Qty	Remarks
1	68V-81450-00-00	ROTOR ASSY	1	
2	68V-81460-00-00	BASE ASSY	1	
3	68V-85580-00-00	. .COIL, PULSER	1	
4	68V-81410-00-00	. .STATOR ASSY	1	
5	63D-81345-20-00	. .SCREW, WITH WASHER (M6X30)	3	
6	97607-04110-00	. .SCREW, WITH WASHER	1	
7	445-81328-20-00	. .CLAMP	1	
8	68V-81673-00-00	ROTOR	1	
9	99530-08012-00	.PIN, DOWEL	2	
10	97095-06030-00	BOLT	4	
11	92995-06100-00	WASHER, SPRING	4	
12	92995-06600-00	WASHER	4	
13	90280-04M08-00	KEY, WOODRUFF	1	
14	90201-24014-00	WASHER, PLATE	1	
15	90179-24002-00	NUT	1	
16	6D8-81332-00-00	PLATE, TIMING	1	
17	97985-06210-00	SCREW, WITH WASHER	1	
18	67F-81337-01-00	COVER, FLYWHEEL	1	
19	90387-06M71-00	COLLAR	4	
20	90480-15M31-00	GROMMET	2	

CONTINUED ON NEXT FRAME >

GENERATOR

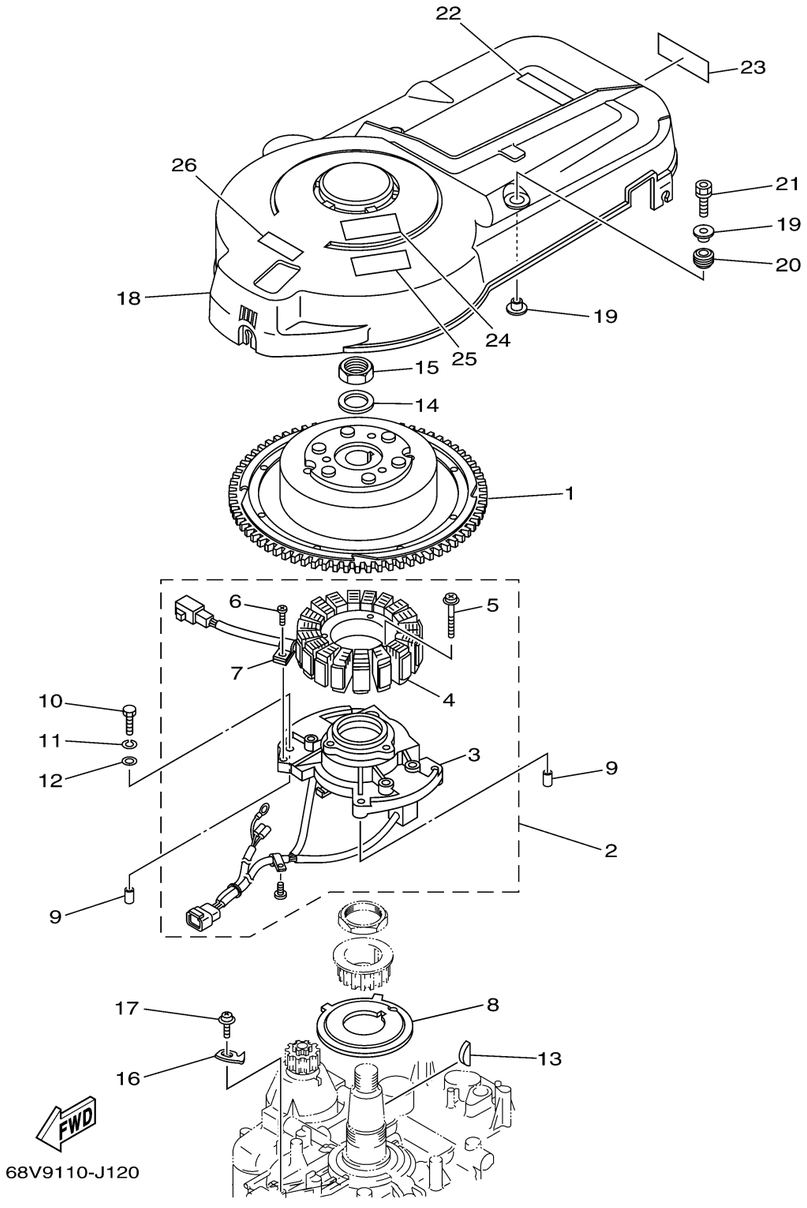

Ref No.	Part Number	Description	Qty	Remarks
21	90119-06M92-00	BOLT, WITH WASHER	2	
22	67F-12138-40-00	MARK, CAUTION	1	
23	68V-13437-42-00	MARK, CAUTION	1	
24	6AH-81995-40-00	LABEL, WARNING	1	
25	6AH-81994-40-00	LABEL, SAFETY	1	
26	6AG-81996-00-00	MARK	1	