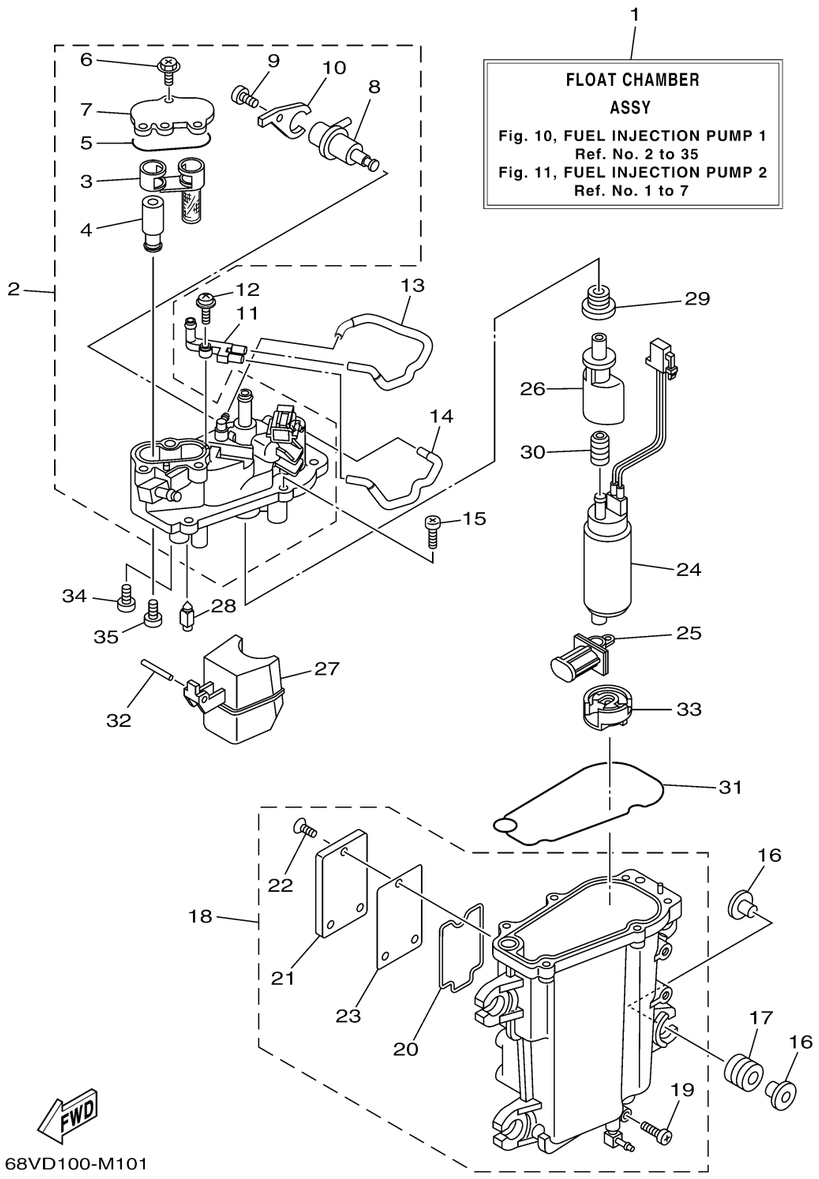

FUEL INJECTION PUMP 1

Ref No.	Part Number	Description	Qty	Remarks
1	68V-14180-42-00	FLOAT CHAMBER ASSY	1	
2	68V-14182-21-00	COVER, FLOAT CHAMBER	1	
3	6CB-24501-01-00	. .FILTER, FUEL	1	
4	68V-24481-00-00	. .PLUG	1	
5	6CB-13016-00-00	. .O-RING	1	
6	6CB-14216-00-00	. .SCREW	3	
7	6CB-24217-00-00	. .COVER	1	
8	6CB-13906-01-00	. .REGULATOR, PRESSURE	1	
9	6CB-14564-00-00	. .SCREW	1	
10	6CB-14146-00-00	. .PLATE	1	
11	68V-24379-10-00	PIPE, JOINT 4	1	
12	68V-14216-00-00	SCREW	1	
13	68V-1475H-00-00	PIPE 5	1	
14	68V-1475J-00-00	PIPE 6	1	
15	63P-14567-00-00	SCREW	6	
16	69J-13716-00-00	COLLAR	8	
17	6CB-13593-00-00	DAMPER	4	
18	68V-14181-21-00	BODY, FLOAT CHAMBER 1	1	
19	6P2-14191-00-00	. .PLUG, DRAIN	1	
20	6CB-14239-00-00	. .SEAL	1	

CONTINUED ON NEXT FRAME >

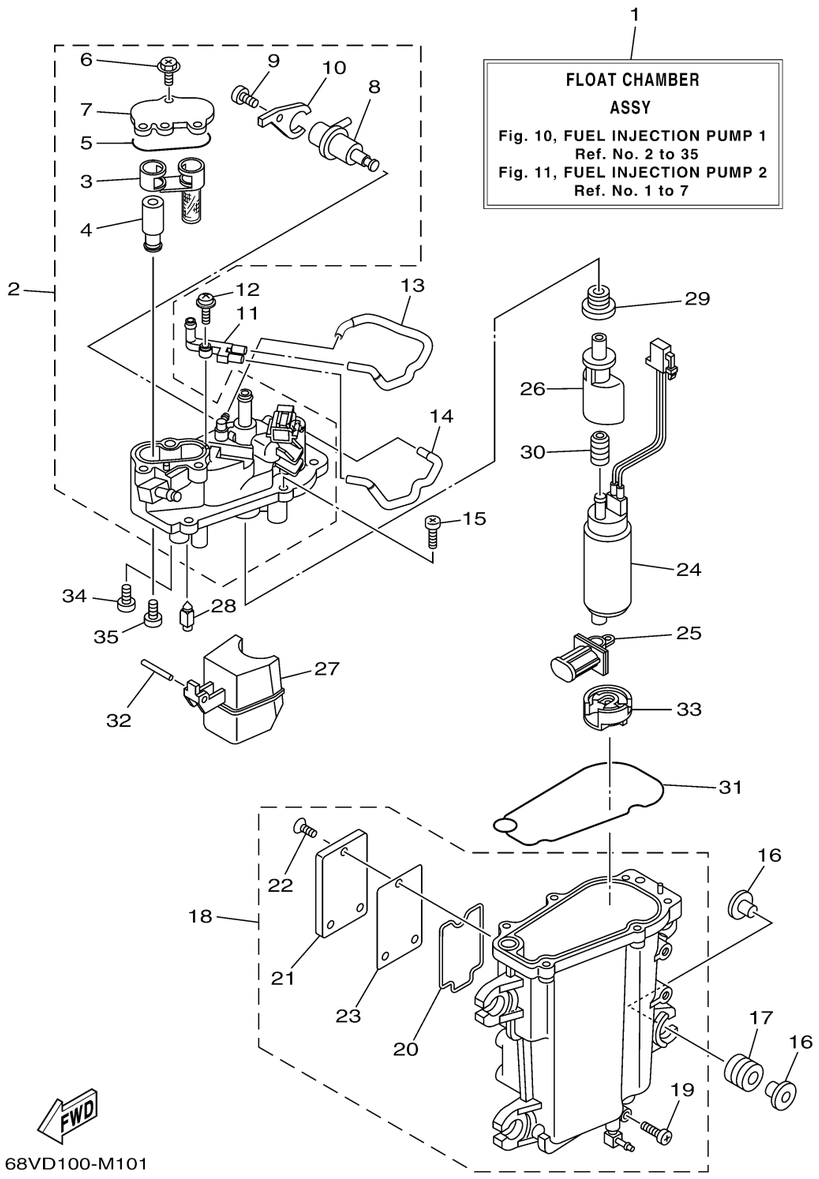

FUEL INJECTION PUMP 1

Ref No.	Part Number	Description	Qty	Remarks
21	6CB-24452-10-00	. .COVER	1	
22	6CB-14429-01-00	. .SCREW	3	
23	6CB-24482-00-00	. .GASKET 1	1	
24	68V-13907-20-00	FUEL PUMP COMP.	1	
25	63P-13915-00-00	FILTER	1	
26	6AW-13132-00-00	JOINT	1	
27	6CB-14985-00-00	FLOAT	1	
28	6CB-14546-00-00	VALVE, NEEDLE	1	
29	6CB-1447B-00-00	BUSH 1	1	
30	6AW-13781-00-00	DAMPER, PUMP	1	
31	6CB-14984-00-00	GASKET, FLOAT CHAMBER	1	
32	6P2-14386-00-00	PIN, FLOAT	1	
33	6AW-13784-00-00	COVER, PUMP	1	
34	4SV-24453-00-00	SCREW	1	
35	98507-04008-00	SCREW, PAN HEAD	1	