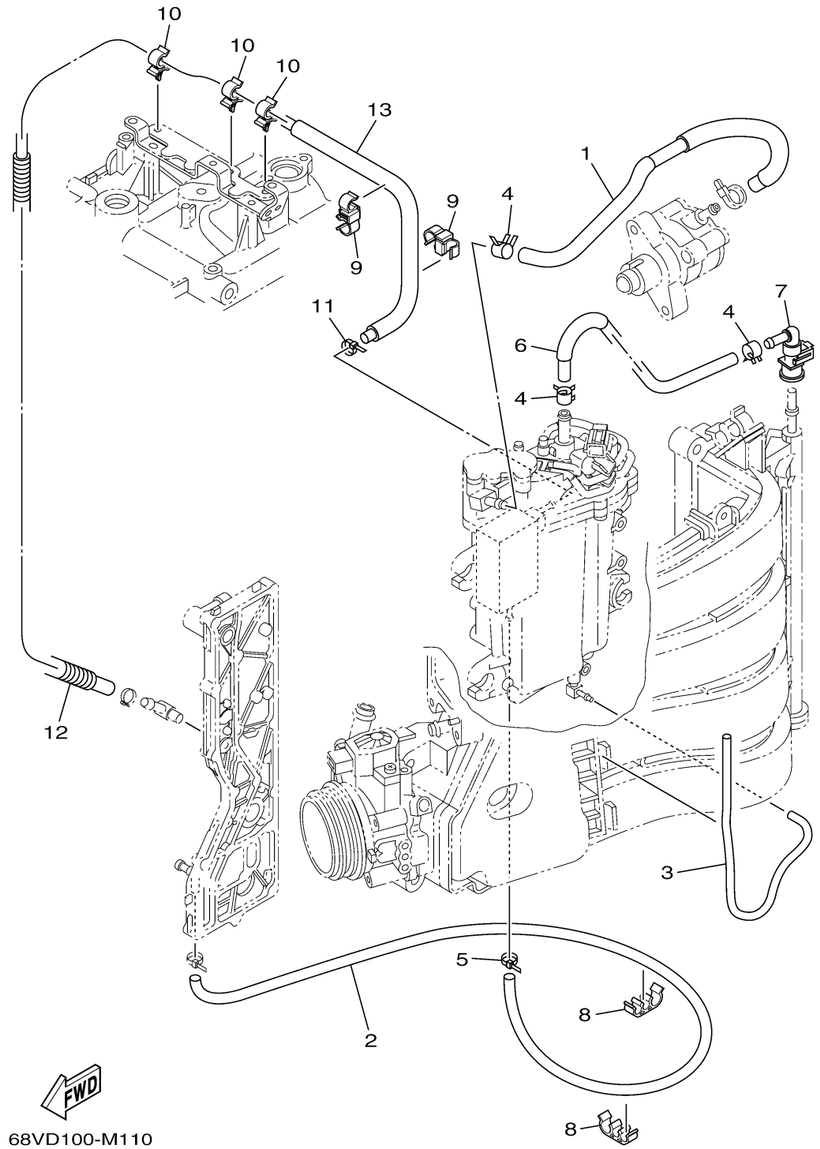

FUEL INJECTION PUMP 2

Ref No.	Part Number	Description	Qty	Remarks
1	68V-24324-10-00	PIPE 13	1	
2	68V-12482-00-00	PIPE 2	1	
3	6AW-14197-00-00	PIPE	1	
4	68V-13577-00-00	CLIP	3	
5	90465-11M10-00	CLAMP	1	
6	68V-13971-30-00	PIPE, FUEL 1	1	
7	6AW-24300-00-00	FUEL PIPE JOINT	1	
8	90464-11008-00	CLAMP	2	
9	90464-12010-00	CLAMP	2	
10	90464-09129-00	CLAMP	3	
11	90465-11M10-00	CLAMP	1	
12	68V-24864-10-00	TUBE	1	
13	68V-12484-21-00	PIPE 4	1	