VALVE

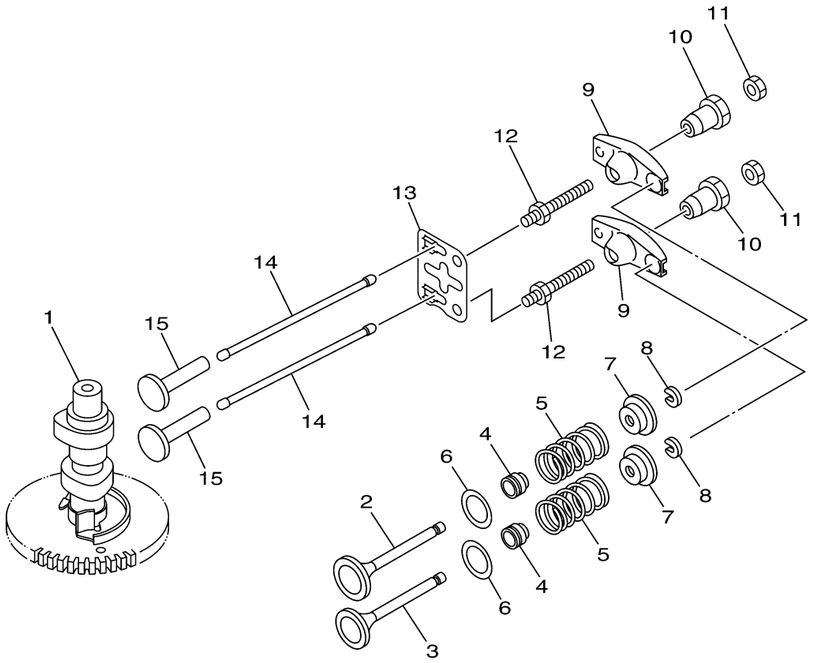

FWD

6BV1100-J050

Ref No.	Part Number	Description	Qty	Remarks
1	6BX-E2170-00-00	CAMSHAFT ASSY 1	1	
2	6BX-12111-00-00	VALVE, INTAKE	1	
3	6AU-12121-00-00	VALVE, EXHAUST	1	
4	51Y-12119-00-00	SEAL, VALVE STEM	2	
5	60R-12113-00-00	SPRING, VALVE INNER	2	
6	68T-12116-00-00	SEAT, VALVE SPRING	2	
7	7NJ-12117-00-00	RETAINER, VALVE SPRING	2	
8	7NJ-12118-00-00	LOCK, VALVE SPRING RETAINER	2	
9	67D-12151-00-00	ARM, VALVE ROCKER	2	
10	7FK-12165-00-00	PIVOT, ROCKER ARM	2	
11	7FK-12158-00-00	NUT, LOCK	2	
12	67D-12157-00-00	BOLT	2	
13	6BX-E2155-00-00	GUIDE, PUSH ROD	1	
14	6BX-12154-00-00	ROD, VALVE PUSH	2	
15	JA9-12153-00-00	LIFTER, VALVE	2	