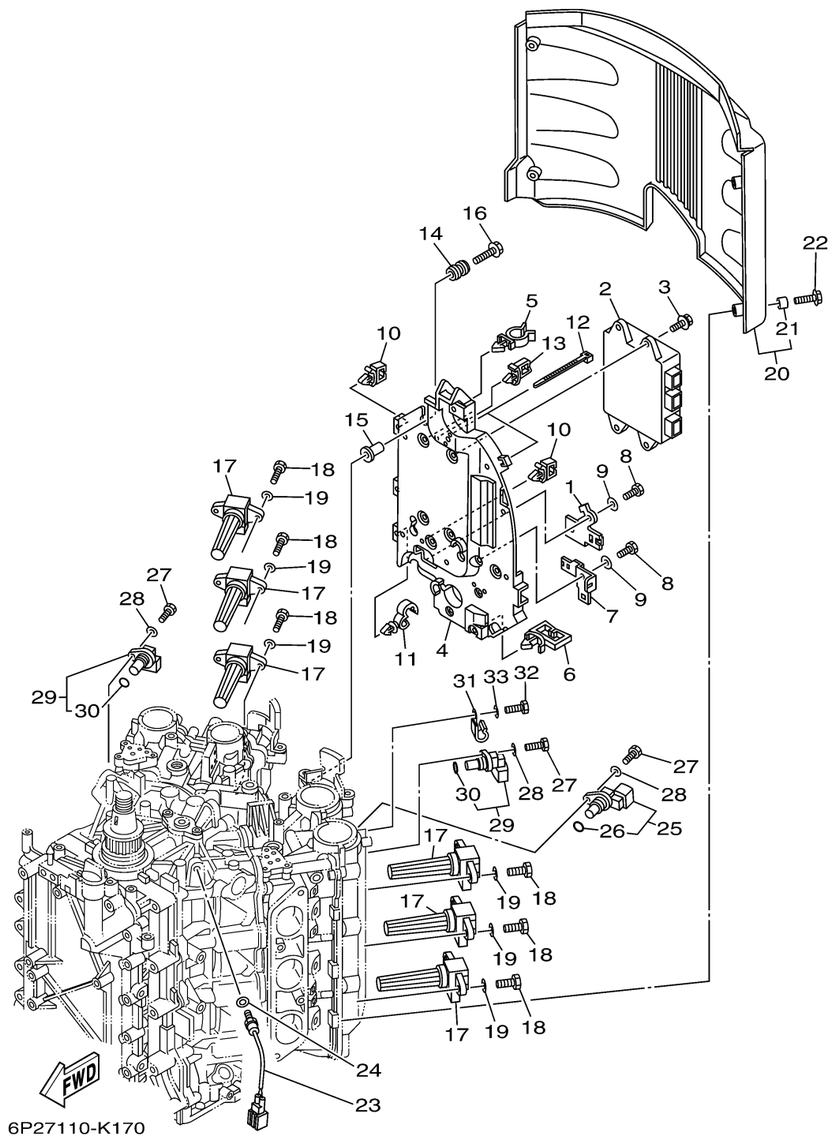

ELECTRICAL 1

Ref No.	Part Number	Description	Qty	Remarks
1	6P2-8257V-00-00	PLATE, CONNECTOR	1	
2	6AL-8591A-13-00	ENGINE CONTROL UNIT ASSY	1	
3	90119-06M82-00	BOLT, WITH WASHER	4	
4	6P2-82316-00-00	BRACKET, IGNITION COIL	1	
5	90464-19M45-00	CLAMP	1	
6	90464-23199-00	CLAMP	1	
7	6P2-81845-00-00	PLATE	1	
8	97095-06016-00	BOLT	2	
9	92995-06600-00	WASHER	2	
10	90464-11121-00	CLAMP	4	
11	90464-13249-00	CLAMP	2	
12	90465-14M66-00	CLAMP	2	
13	90464-08004-00	CLAMP	1	
14	6A0-82317-00-00	.DAMPER, IGNITION COIL	4	
15	90387-06119-00	.COLLAR	4	
16	90119-06M59-00	BOLT, WITH WASHER	4	
17	6P2-82310-01-00	IGNITION COIL ASSY	6	
18	97095-06020-00	BOLT	12	
19	92995-06600-00	WASHER	12	
20	6P2-82314-00-00	COVER, IGNITION COIL	1	

CONTINUED ON NEXT FRAME >

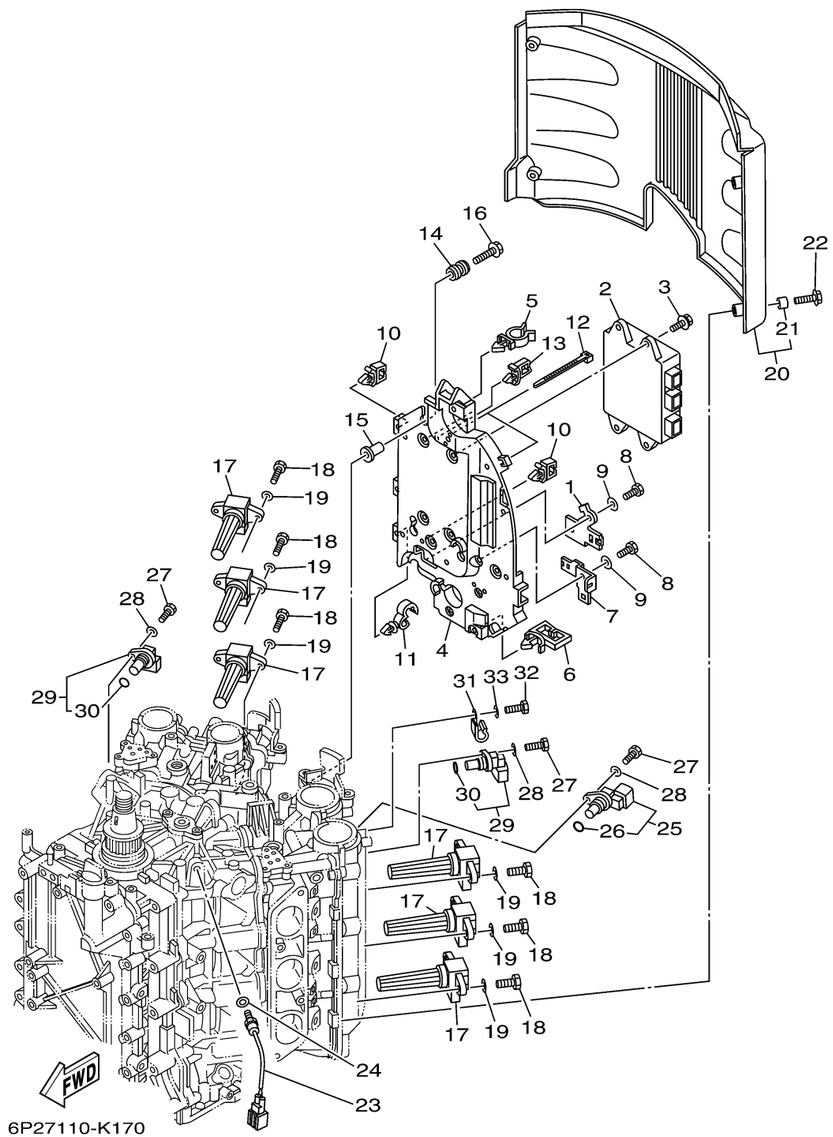

ELECTRICAL 1

Ref No.	Part Number	Description	Qty	Remarks
21	90387-06044-00	. .COLLAR	4	
22	90119-06M92-00	BOLT, WITH WASHER	4	
23	61A-85790-00-00	THERMOSENSOR ASSY	1	
24	92990-10600-00	WASHER, PLATE	1	
25	6P2-85896-00-00	SENSOR, CAM POSITION	1	
26	6P2-85075-00-00	. .O-RING	1	
27	97095-06020-00	BOLT	3	
28	92995-06600-00	WASHER	3	
29	6P2-85897-00-00	SENSOR, CAM POSITION 2	2	
30	6P2-85075-00-00	. .O-RING	1	
31	90462-08032-00	CLAMP	1	
32	97095-06012-00	BOLT	1	
33	92995-06600-00	WASHER	1	