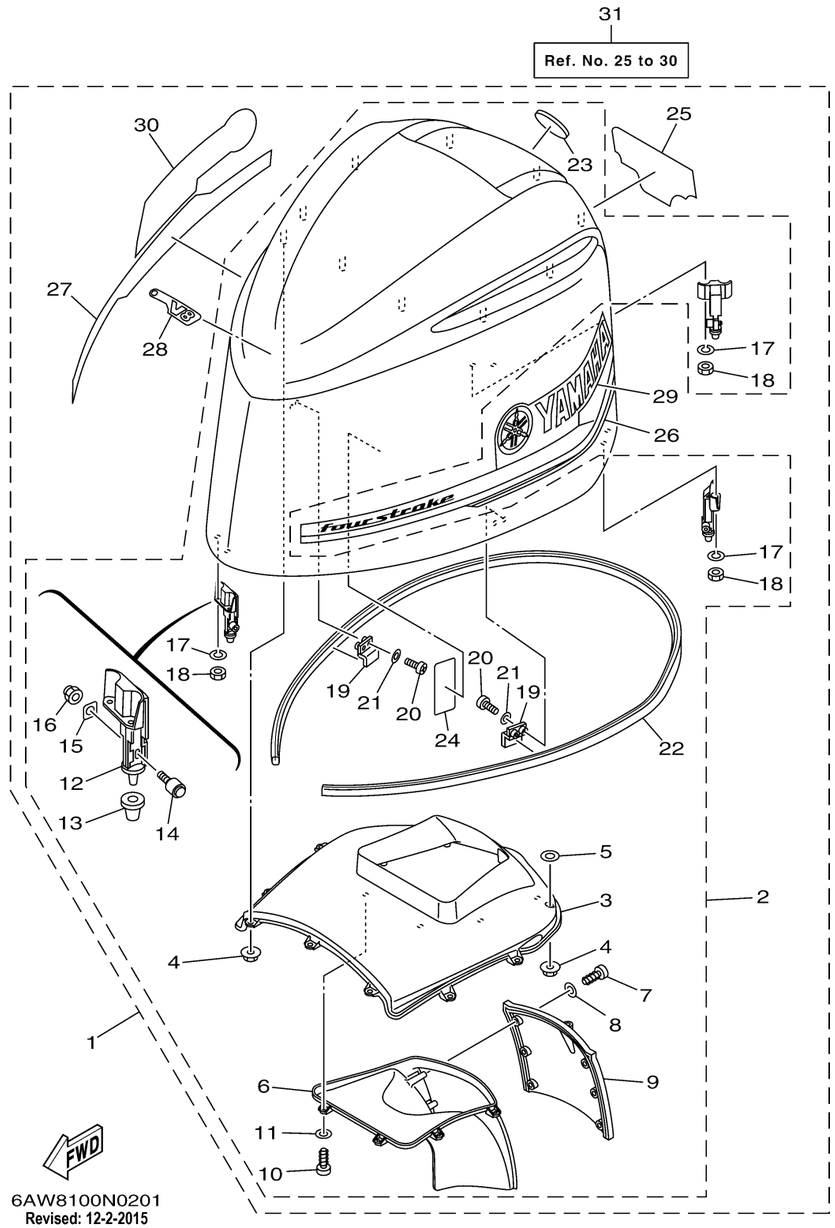


# TOP COWLING

| Ref No. | Part Number | Description | Qty | Remarks |
|---|---|---|---|---|
| 1 | 6AW-42610-20-00 | TOP COWLING ASSY | 1 | |
| 2 | 6AW-4261A-00-00 | . .TOP COWLING W/O GRAPHICS | 1 | |
| 3 | 6AW-42613-00-00 | . . ..MOLDING, AIR DUCT | 1 | |
| 4 | 90179-06M28-00 | . . NUT | 10 | |
| 5 | 6CB-42545-00-00 | . . ..WASHER, PLAIN | 3 | |
| 6 | 6AW-42635-00-00 | . . ..DUCT, WATER SEPARATOR | 1 | |
| 7 | 97780-60516-00 | . . SCREW, TAPPING | 6 | |
| 8 | 92995-06200-00 | . . ..WASHER | 6 | |
| 9 | 6AW-42532-00-00 | . . ..COVER | 1 | |
| 10 | 97780-60516-00 | . . SCREW, TAPPING | 7 | |
| 11 | 92995-06200-00 | . . ..WASHER | 7 | |
| 12 | 6AW-42647-00-9S | . . ..HOLDER, CLAMP BAND | 3 | |
| 13 | 6AW-42663-00-00 | . . ..DAMPER | 3 | |
| 14 | 6AW-4264A-00-00 | . . ..HOOK ASSY | 3 | |
| 15 | 6AW-42646-10-00 | . . ..PLATE, CLAMP | 3 | |
| 16 | 95780-08300-00 | . . .NUT, FLANGE | 3 | |
| 17 | 92990-06100-00 | . . WASHER, SPRING | 6 | |
| 18 | 95380-06600-00 | . . NUT, HEXAGON | 6 | |
| 19 | 6AW-42477-00-00 | . . ..PLATE, LOCK | 2 | |
| 20 | 97885-05010-00 | . . ..SCREW, PAN HEAD | 4 | |

CONTINUED ON NEXT FRAME >

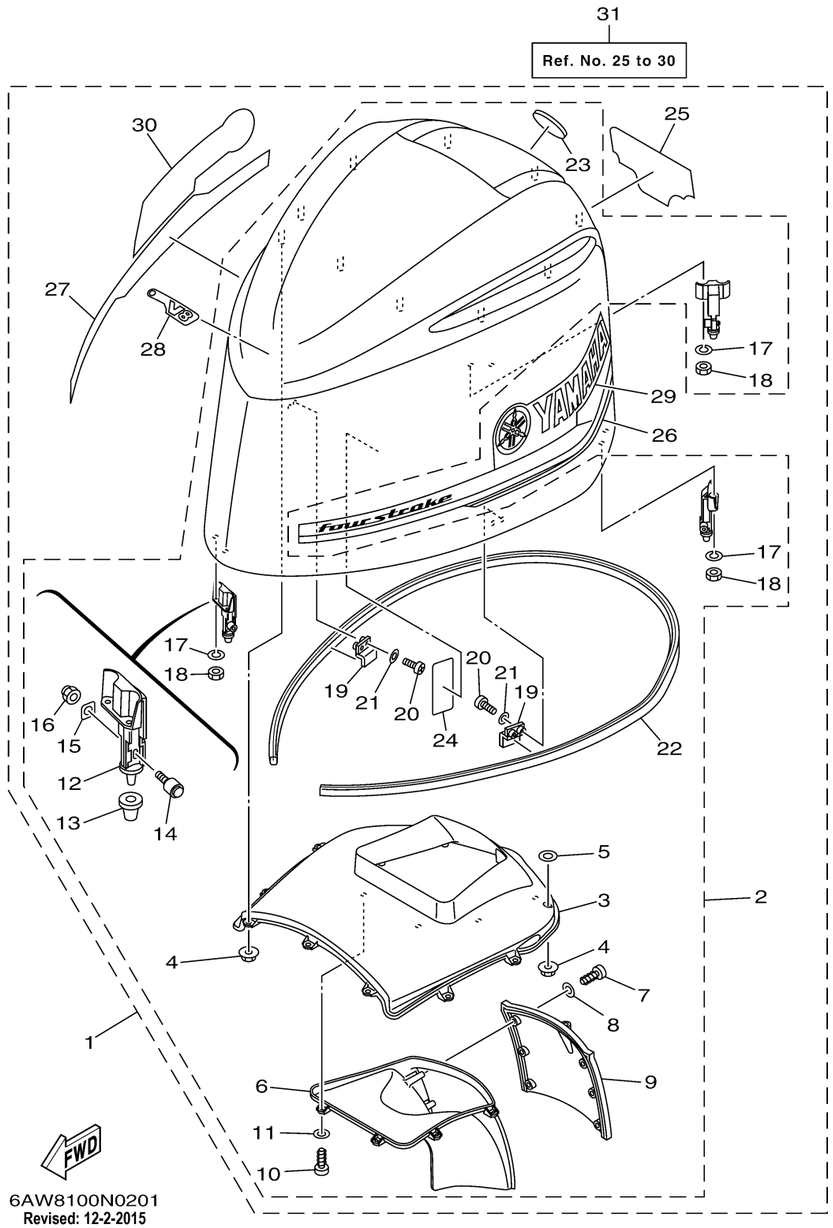


# TOP COWLING

| Ref No. | Part Number | Description | Qty | Remarks |
|---|---|---|---|---|
| 21 | 92995-05600-00 | . . WASHER | 4 | |
| 22 | 6AW-42628-20-00 | . . ..SEAL | 1 | |
| 23 | 6AW-42697-10-00 | . . ...TUNING FORK MARK | 1 | |
| 24 | 6AH-42735-00-00 | . . ..PROTECTOR | 1 | |
| 25 | 6AW-42678-00-00 | . .GRAPHIC, REAR | 1 | |
| 26 | 6AW-42675-00-00 | . .GRAPHIC, SIDE 1 | 1 | |
| 27 | 6AW-42676-00-00 | . .GRAPHIC, SIDE 2 | 1 | |
| 28 | 6AW-42677-00-00 | . .GRAPHIC, FRONT | 1 | |
| 29 | 6AW-42681-00-00 | . .MARK, COWLING | 1 | |
| 30 | 6AW-42682-00-00 | . .MARK, COWLING | 1 | |
| 31 | 6AWW42670000 | GRAPHIC SET, TOP COWLING | 1 | AP |