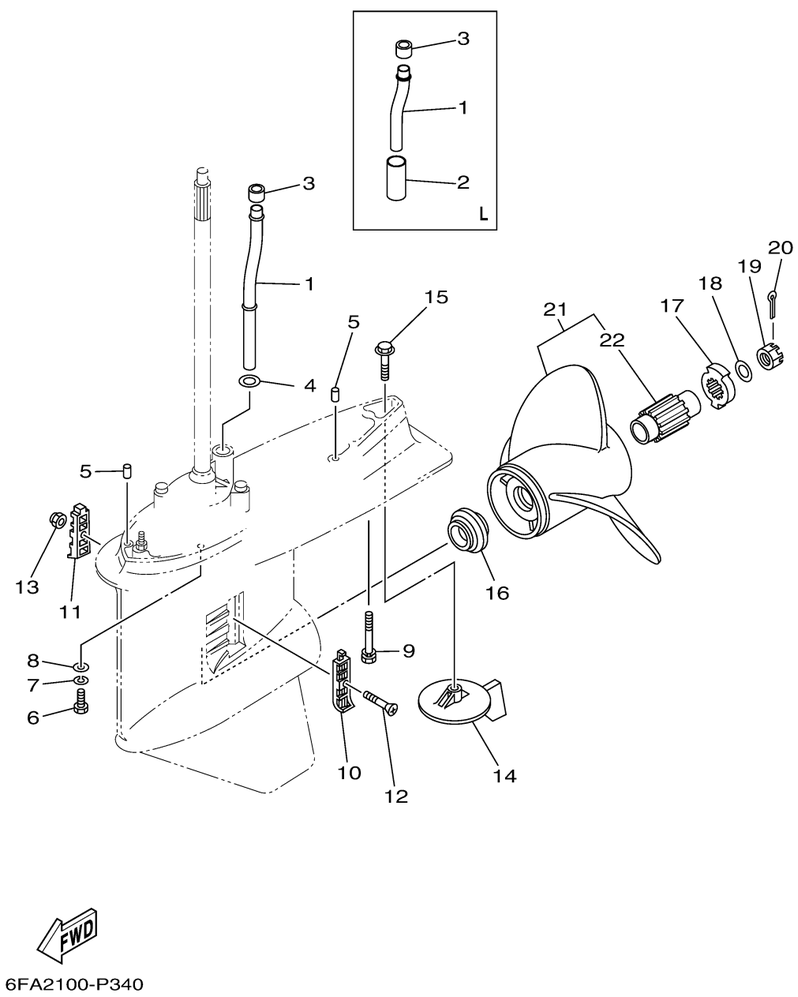

LOWER CASING DRIVE 2

Ref No.	Part Number	Description	Qty	Remarks
1	6DA-44361-00-00	TUBE, WATER 1	1	X(25.3")
1	6DA-44361-10-00	TUBE, WATER 1	0	L(20.3")
2	90445-23002-00	HOSE (L59)	0	L(20.3")
3	6E5-44365-00-00	DAMPER, WATER SEAL 1	1	
4	90202-16061-00	WASHER, PLATE	1	X(25.3")
5	93608-16M16-00	PIN, DOWEL	2	
6	97095-10045-00	BOLT	6	
7	92995-10100-00	WASHER	6	
8	92995-10600-00	WASHER	6	
9	90119-10MA2-00	BOLT, WITH WASHER	1	
10	6J9-45214-00-00	COVER, WATER INLET 1	1	
11	6J9-45215-00-00	COVER, WATER INLET 2	1	
12	90152-05M08-00	SCREW, COUNTERSUNK	1	
13	90185-05002-00	NUT, NYLON	1	
14	6J9-45371-01-00	TAB-TRIM	1	
15	90105-10M00-00	BOLT, FLANGE	1	
16	63P-45987-00-00	SPACER 1	1	
17	6CE-45997-00-00	SPACER 2	1	
18	92990-18200-00	WASHER	1	
19	90171-18M04-00	NUT, CASTLE	1	

CONTINUED ON NEXT FRAME >

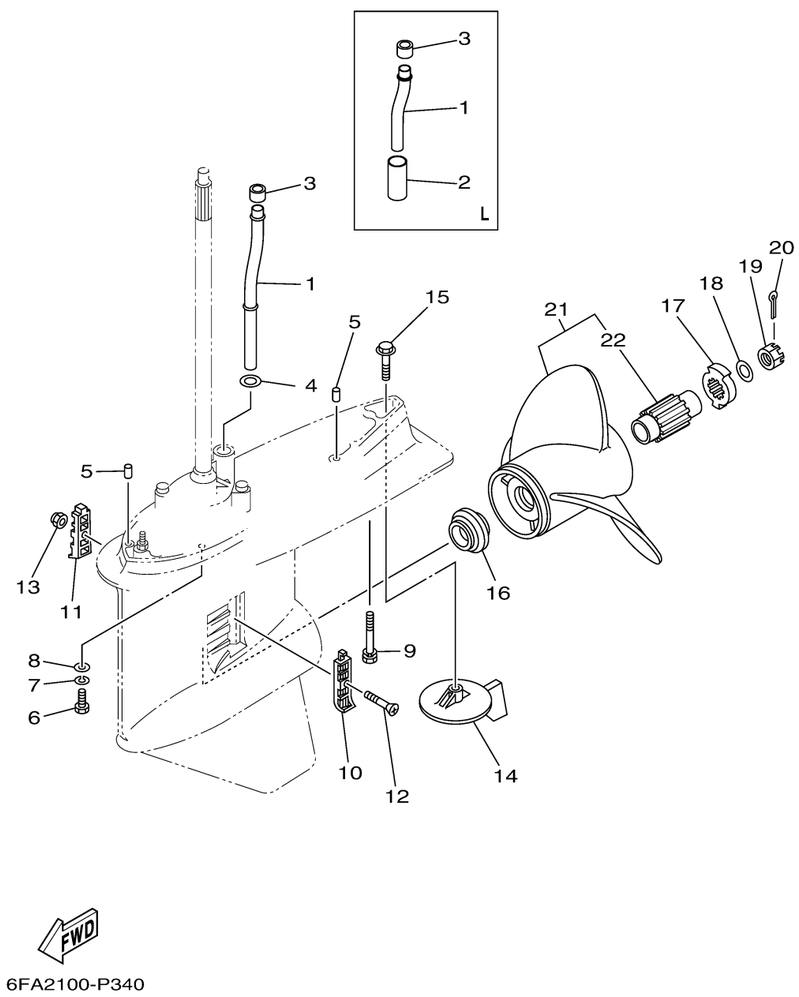

LOWER CASING DRIVE 2

Ref No.	Part Number	Description	Qty	Remarks
20	91490-40030-00	PIN, COTTER	1	
21	68F-45976-10-00	PROPELLER (3X13-3/4"X21"-M)	1	UR SDS PROP.
21	68F-45974-10-00	PROPELLER (3X13-3/4"X19"-M)	1	UR SDS PROP.
21	68F-45972-10-00	PROPELLER (3X14-1/4"X17"-M)	1	UR SDS PROP.
21	68F-45970-10-00	PROPELLER (3X14-1/2"X15"-M)	1	UR SDS PROP.
21	68F-45978-10-00	PROPELLER (3X14-1/4"X18"-M)	1	UR SDS PROP.
22	6CE-45C81-00-00	. .DAMPER RUBBER, PROPELLER 1	1	