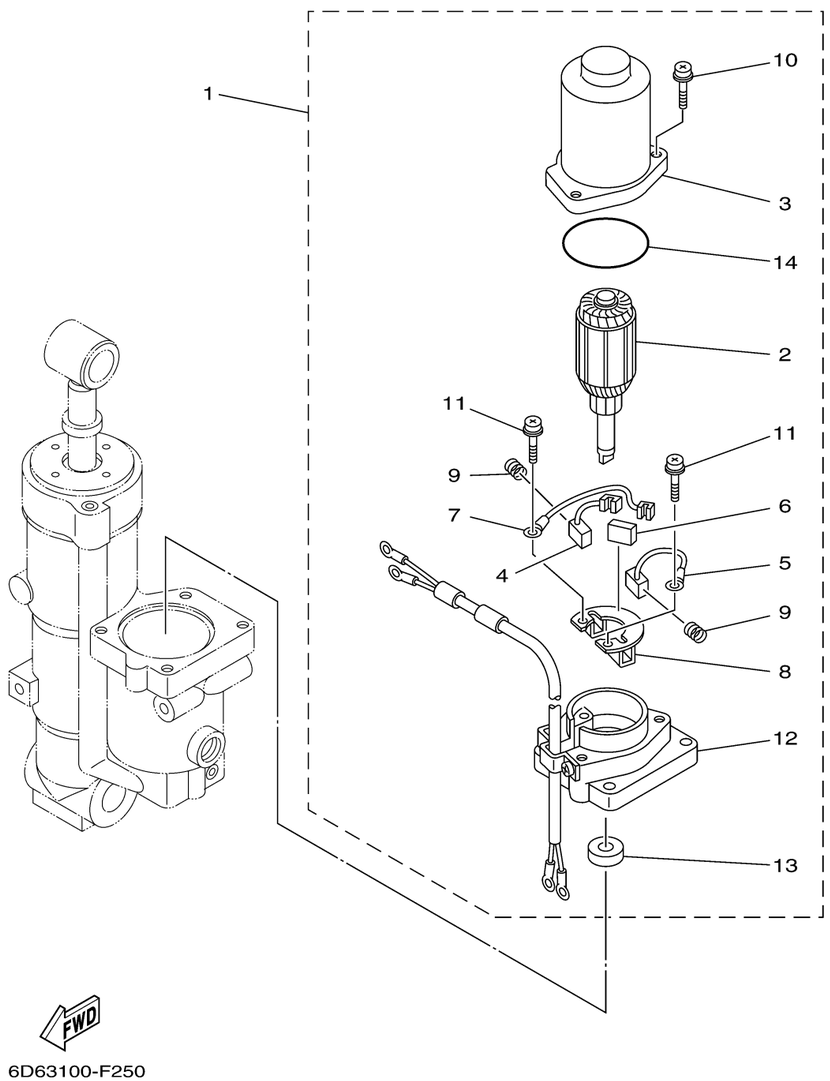

POWER TRIM TILT ASSY 2

Ref No.	Part Number	Description	Qty	Remarks
1	6D8-43880-01-00	MOTOR ASSY	1	
2	6D8-43805-01-00	. .ARMATURE ASSY	1	
3	6D8-43804-01-00	. .STATOR ASSY	1	
4	6H1-43891-11-00	. .BRUSH 1	1	
5	6H1-43892-11-00	. .BRUSH 2	1	
6	6H1-82181-10-00	. .CIRCUIT BREAKER COMP.	1	
7	62X-43807-00-00	. .WIRE SUB ASSY	1	
8	6H1-4380F-11-00	. .PLATE, BRUSH HOLDER	1	
9	62X-4386K-00-00	. .SPRING, BRUSH	2	
10	97980-05225-00	. .SCREW, WITH WASHER	3	
11	97602-04216-00	. .SCREW, PAN HEAD WITH WASHER	2	
12	6D8-43881-01-00	. .FRAME, END	1	
13	93102-08414-00	. .OIL SEAL	1	
14	93210-554A9-00	. .O-RING	1	