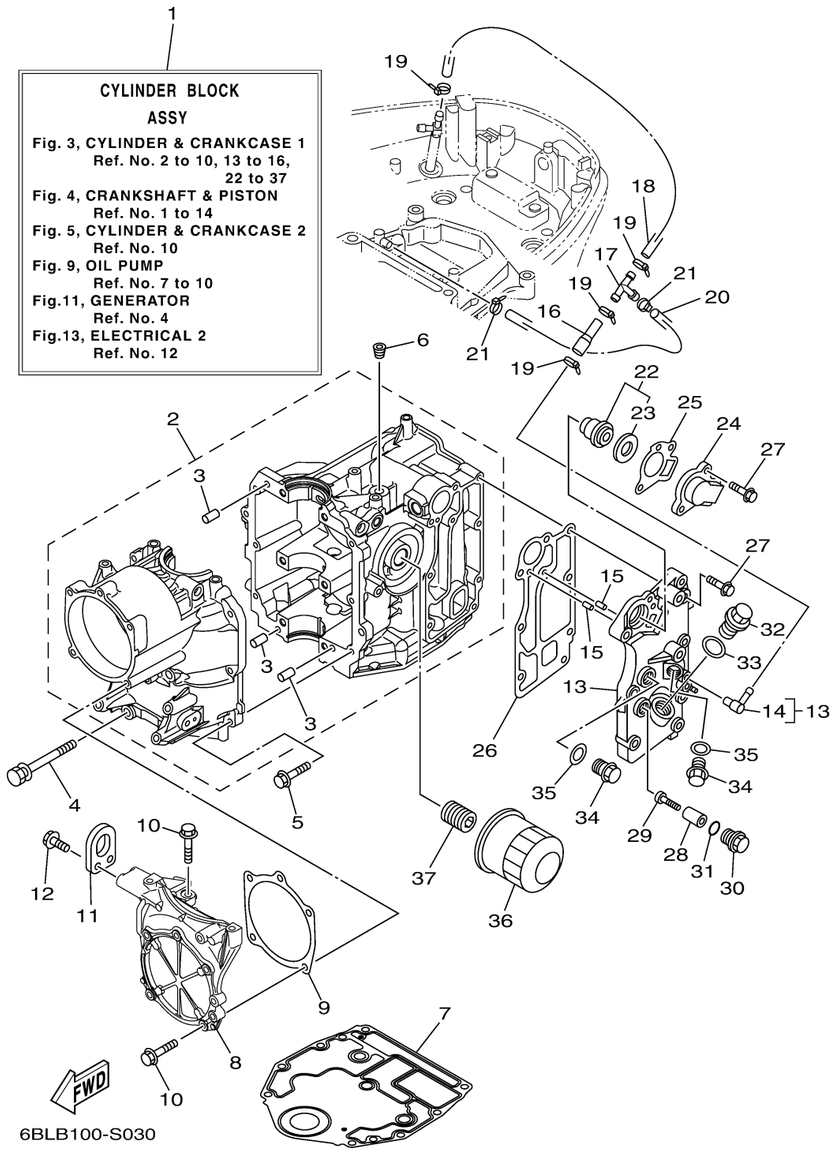

CYLINDER CRANKCASE 1

Ref No.	Part Number	Description	Qty	Remarks
1	6BL-W009B-02-1S	CYLINDER BLOCK ASSY	1	
2	6BL-15100-02-00	CRANKCASE ASSY	1	
3	93606-12019-00	. .PIN, DOWEL	3	
4	90119-08M01-00	BOLT, WITH WASHER	6	
5	97513-06525-00	BOLT, WITH WASHER	7	
6	90344-51003-00	PLUG, TAPER SCREW	1	
7	6BG-11351-00-00	.GASKET, CYLINDER	1	
8	6BL-15121-00-1S	CRANKCASE 2	1	
9	6BL-15663-00-00	.SEAL	1	
10	97513-06525-00	BOLT, WITH WASHER	6	
11	62Y-11119-00-00	HANGER, ENGINE	1	
12	97E95-06520-00	BOLT, HEXAGON W/W DEEP RECESS	2	
13	6BL-41113-01-1S	OUTER COVER, EXHAUST	1	
14	6H1-11372-00-00	. NIPPLE, HOSE	1	
15	93604-10M03-00	.PIN, DOWEL	2	
16	6BP-12481-00-00	PIPE 1	1	
17	688-24378-00-00	PIPE, JOINT 3	1	
18	90445-09251-00	HOSE (L350)	1	
19	90465-11M10-00	CLAMP	4	
20	90445-09104-00	HOSE (L300)	1	

CONTINUED ON NEXT FRAME >

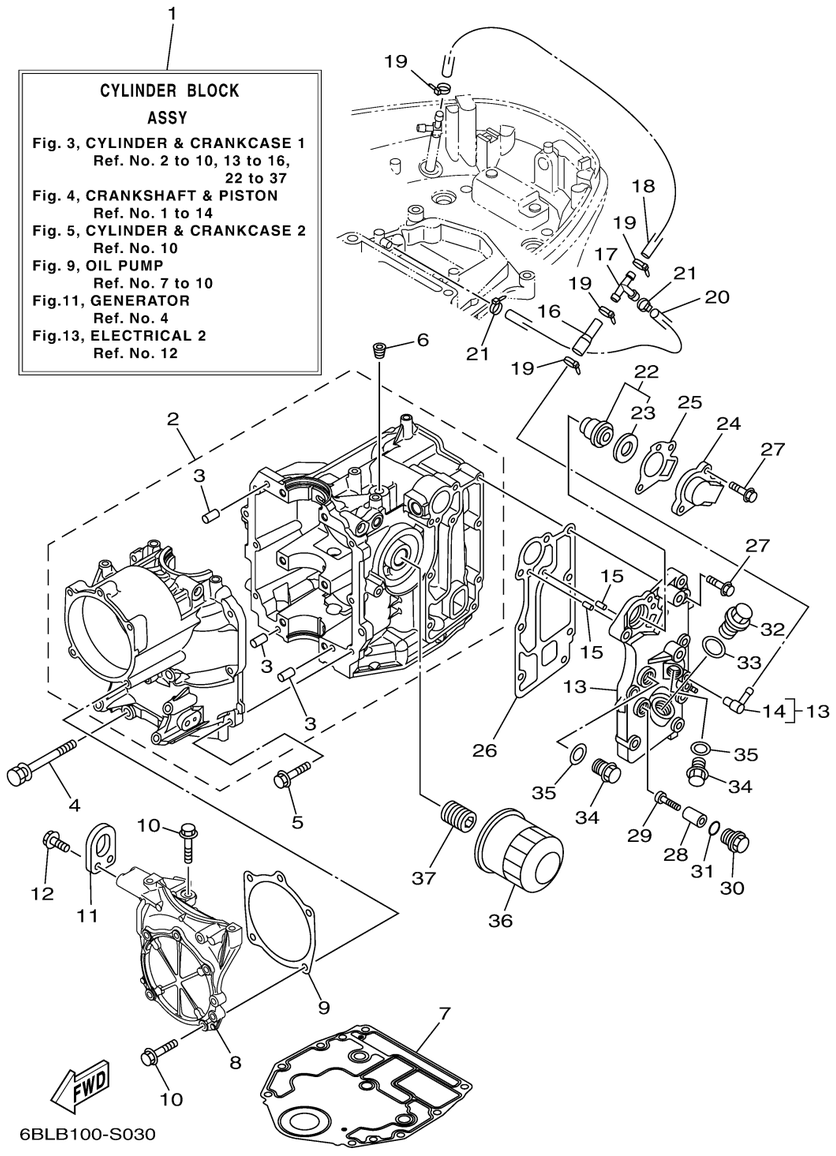

CYLINDER CRANKCASE 1

Ref No.	Part Number	Description	Qty	Remarks
21	90465-11M10-00	CLAMP	2	
22	6G8-12411-03-00	THERMOSTAT	1	
23	688-12412-00-00	. .SEAL, THERMOSTAT	1	
24	6BG-12413-00-1S	COVER, THERMOSTAT	1	
25	62Y-12414-00-00	.GASKET, COVER	1	
26	6BL-41114-00-00	.GASKET, EXHAUST OUTER COVER	1	
27	90119-06MA5-00	BOLT, WITH WASHER	8	
28	6G8-11325-00-00	ANODE	1	
29	98980-05025-00	SCREW, BIND	1	
30	6G8-11197-A0-00	PLUG, BLIND	1	
31	93210-13M63-00	O-RING	1	
32	90340-18M09-00	.PLUG, STRAIGHT SCREW	1	
33	90201-186F1-00	.WASHER, PLATE	1	
34	90340-14M06-00	PLUG, STRAIGHT SCREW	2	
35	90430-14115-00	.GASKET	2	
36	5GH-13440-60-00	ELEMENT ASSY, OIL CLEANER	1	
37	6C5-12858-A0-00	BOLT, UNION	1	