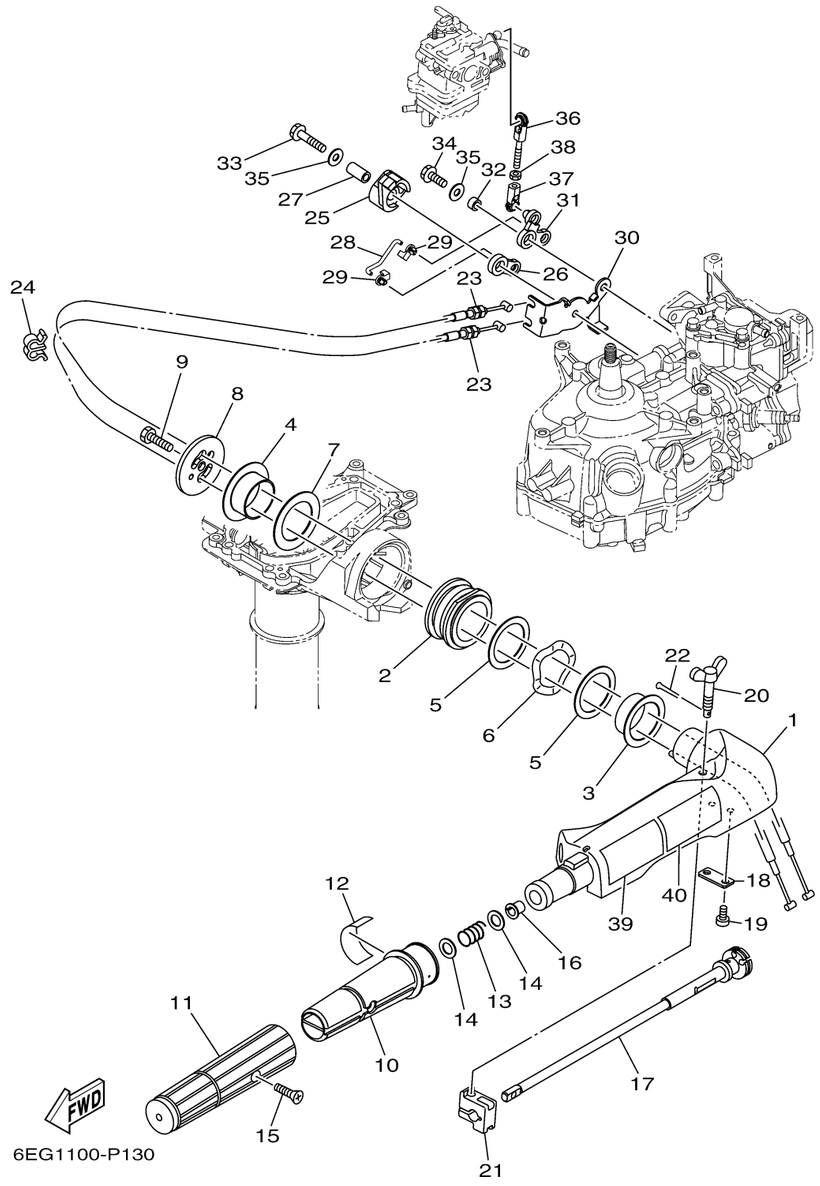

STEERING

Ref No.	Part Number	Description	Qty	Remarks
1	6EG-G2111-00-8D	HANDLE, STEERING	1	
2	6BX-42129-00-00	BUSHING, RUBBER	1	
3	6EE-G2171-00-00	BUSHING	1	
4	6EE-G2172-00-00	BUSHING 2	1	
5	6EE-G2181-00-00	WASHER	2	
6	6EE-G2188-00-00	WASHER, WAVE	1	
7	6EE-G2182-00-00	WASHER 2	1	
8	6EE-G2131-00-00	COVER, HANDLE STEERING	1	
9	97D75-08025-00	BOLT, HEXAGON DEEP RECESS	1	
10	6EG-G2119-00-00	GRIP, STEERING HANDLE	1	
11	6EG-G2177-00-00	RUBBER, HANDLE	1	
12	6EG-G2137-00-00	INDICATOR, THROTTLE	1	
13	90501-23215-00	SPRING, COMPRESSION	1	
14	90201-10M02-00	WASHER, PLATE	2	
15	90152-05011-00	SCREW, COUNTERSUNK	1	
16	90386-08032-00	BUSH	1	
17	6EG-G2138-00-00	LEVER, THROTTLE	1	
18	6EE-G2159-00-00	STAY	1	
19	97885-05012-00	SCREW, PAN HEAD	2	
20	6G1-42125-01-00	BOLT, FRICTION ADJUSTING	1	

CONTINUED ON NEXT FRAME >

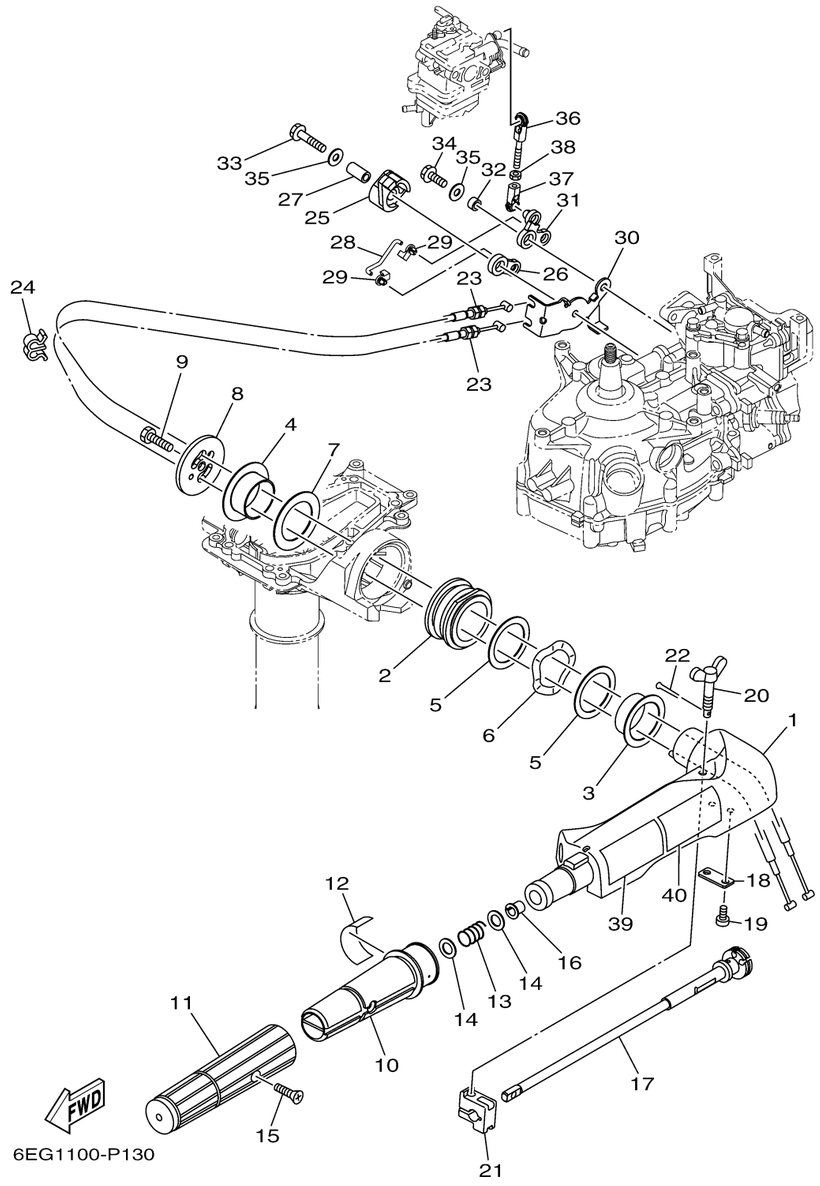

STEERING

Ref No.	Part Number	Description	Qty	Remarks
21	6EE-G2126-00-00	FRICTION, STEERING HANDLE GRIP	1	
22	91490-16010-00	PIN. COTTER	1	
23	6EG-F6301-00-00	THROTTLE CABLE ASSY	2	
24	90464-07M20-00	CLAMP	1	
25	6EE-G1638-00-00	PULLEY	1	
26	6EG-G1283-00-00	LEVER, FREE ACCEL.	1	
27	90387-06252-00	COLLAR	1	
28	6EG-G1211-00-00	LINK, ACCEL.	1	
29	661-41262-02-00	JOINT, CHOKE LEVER	2	
30	6EG-E4497-00-00	STAY, THROTTLE WIRE	1	
31	6EG-G1284-00-00	LEVER, FREE AXLE 2	1	
32	90387-06M24-00	COLLAR	1	
33	97E95-06535-00	BOLT, HEXAGON W/W DEEP RECESS	1	
34	97E95-06520-00	BOLT, HEXAGON W/W DEEP RECESS	1	
35	90201-06M62-00	WASHER, PLATE	2	
36	682-41237-50-00	JOINT, LINK	1	
37	6H1-41237-00-00	JOINT, LINK	1	
38	95380-05600-00	NUT	1	
39	6EF-G2794-40-00	LABEL, WARNING (GENERAL)	1	
40	6EF-G2794-50-00	LABEL, WARNING (GENERAL)	1	