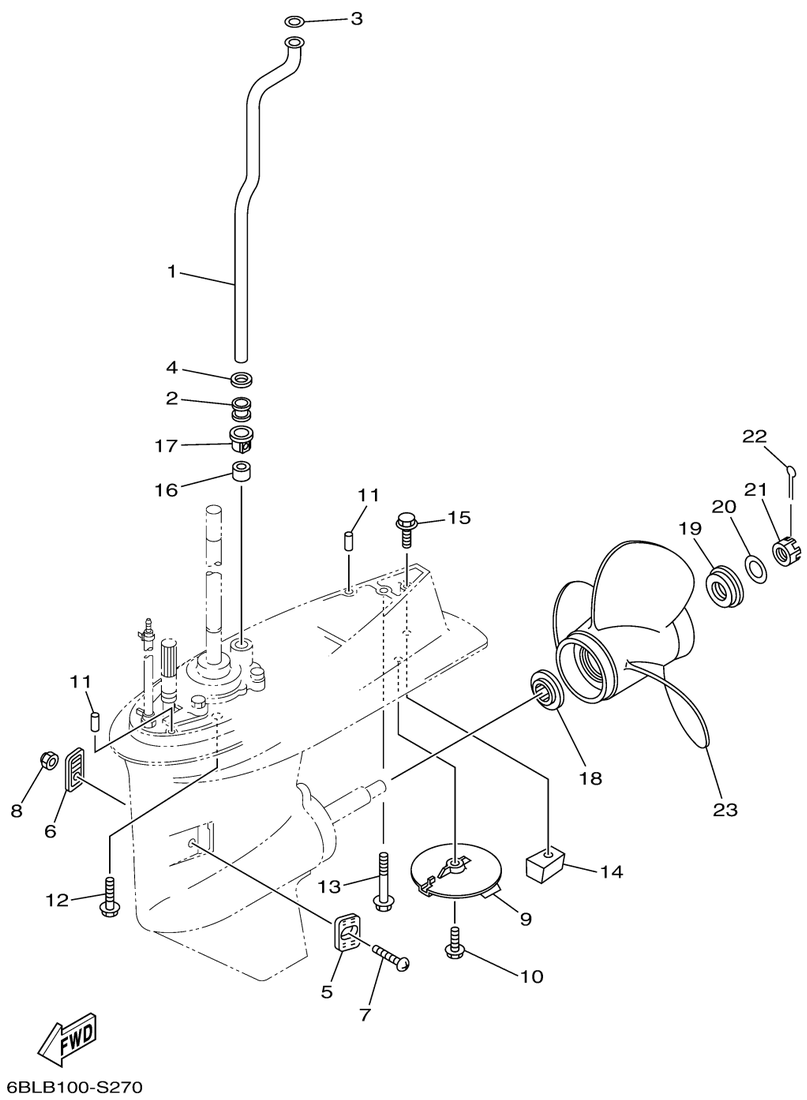

LOWER CASING DRIVE 2

Ref No.	Part Number	Description	Qty	Remarks
1	62Y-44361-00-00	TUBE, WATER 1	1	L(21.1")
2	663-44367-00-00	DAMPER, WATER SEAL 3	1	
3	90202-12060-00	WASHER, PLATE	1	
4	90430-12072-00	GASKET	1	
5	63D-45214-00-00	COVER, WATER INLET 1	1	
6	63D-45215-00-00	COVER, WATER INLET 2	1	
7	90152-05010-00	SCREW, COUNTERSUNK	1	
8	95380-05600-00	NUT	1	
9	67C-45371-00-00	TAB-TRIM	1	
10	97E95-08525-00	BOLT, HEXAGON W/W DEEP RECESS	1	
11	93606-12019-00	PIN, DOWEL	2	
12	90119-10068-00	BOLT, WITH WASHER	4	L(21.1")
13	97E75-08565-00	BOLT, HEXAGON W/W DEEP RECESS	1	L(21.1")
14	67C-45251-00-00	ANODE	1	
15	97E95-08535-00	BOLT, HEXAGON W/W DEEP RECESS	1	
16	663-44366-00-00	DAMPER, WATER SEAL 2	1	
17	63D-44312-00-00	COVER, WATER PUMP HOUSING	1	
18	663-45987-02-00	SPACER 1	1	
19	68U-45997-00-00	SPACER 2	1	
20	92990-16200-00	WASHER, PLAIN	1	

CONTINUED ON NEXT FRAME >

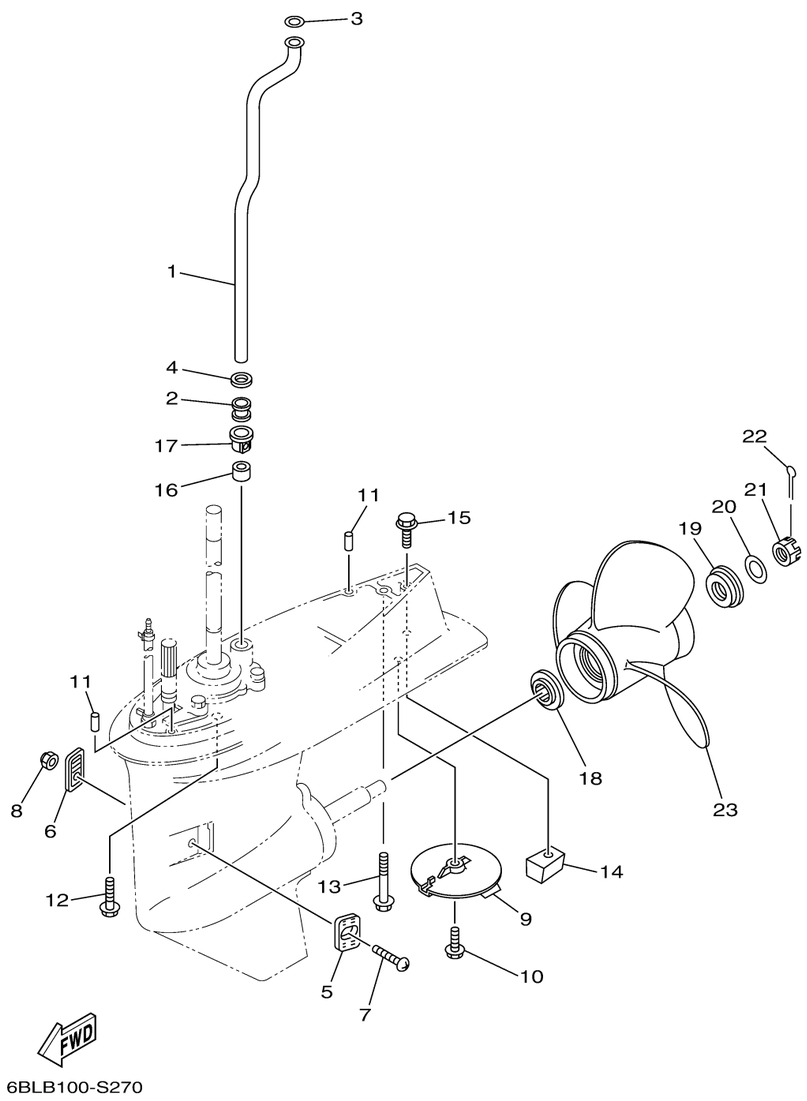

LOWER CASING DRIVE 2

Ref No.	Part Number	Description	Qty	Remarks
21	90171-16011-00	NUT, CASTLE	1	
22	91490-30025-00	PIN. COTTER	1	
23	68U-45941-00-00	PROPELLER (3X12-1/4"X9"-G)	1	