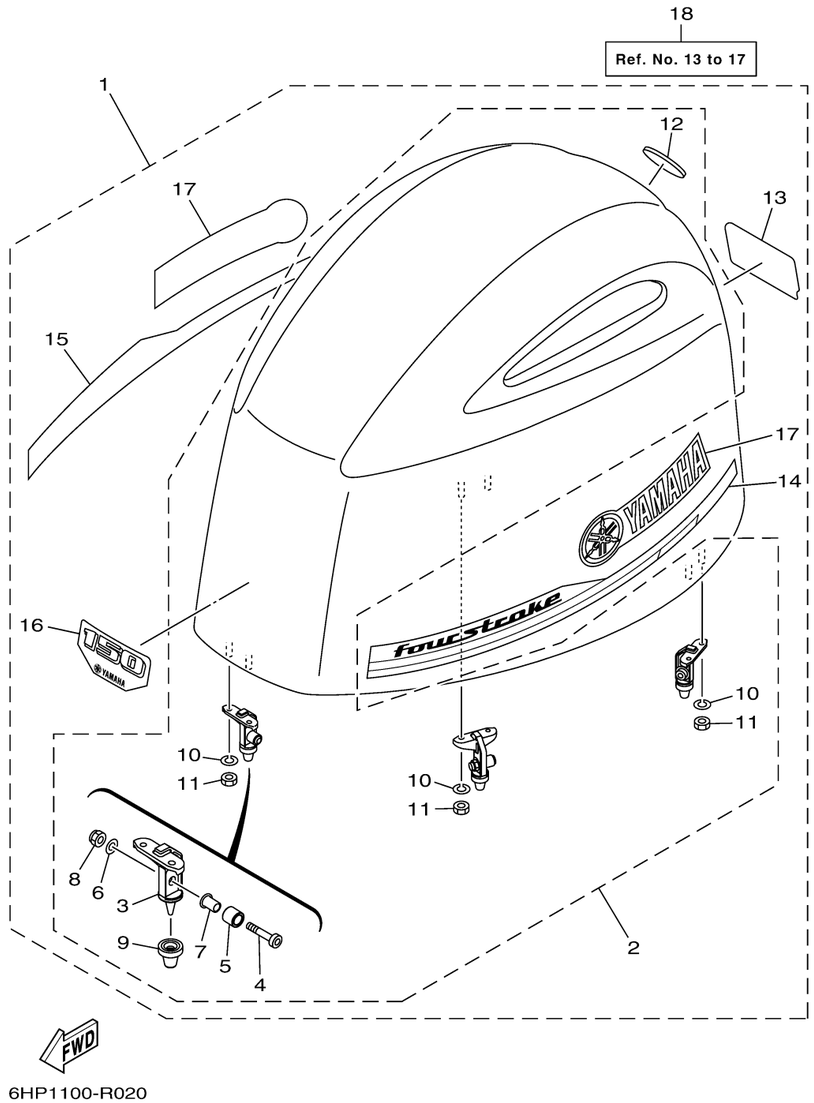

6HP1100-R020

TOP COWLING

Ref No.	Part Number	Description	Qty	Remarks
1	6HP-42610-00-00	TOP COWLING ASSY	1	
2	6DA-4261A-01-00	. .TOP COWLING W/O GRAPHICS	1	
3	6CB-42647-A0-00	. . ..HOLDER, CLAMP BAND	3	
4	90111-08078-00	. . ..BOLT,HEX. SOCKET BUTTON	3	
5	90387-10094-00	. . ..COLLAR	3	
6	92990-08600-00	. . ..WASHER, PLATE	3	
7	90387-08M45-00	. . ..COLLAR	3	
8	95780-08300-00	. . ..NUT, FLANGE	3	
9	6AW-42663-00-00	. . ..DAMPER 2	3	
10	92990-06100-00	. . ..WASHER, SPRING	6	
11	95380-06600-00	. . NUT, HEXAGON	6	
12	6DA-42697-00-00	. . ..TUNING FORK MARK	1	
13	63P-42678-60-00	. .GRAPHIC, REAR	1	
14	6DA-42675-00-00	. .GRAPHIC, SIDE 1	1	
15	6DA-42676-00-00	. .GRAPHIC, SIDE 2	1	
16	63P-42677-60-00	. .GRAPHIC, FRONT	1	
17	63P-42681-20-00	. .MARK, COWLING	2	
18	63P-W4267-10-00	GRAPHIC SET, TOP COWLING	1	AP FOR USA