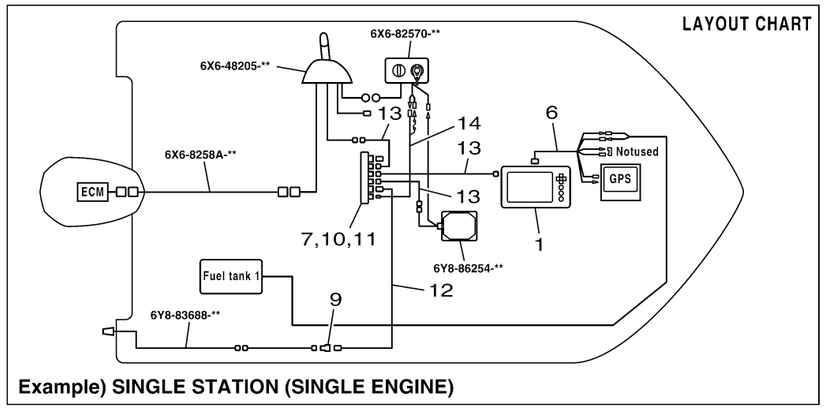

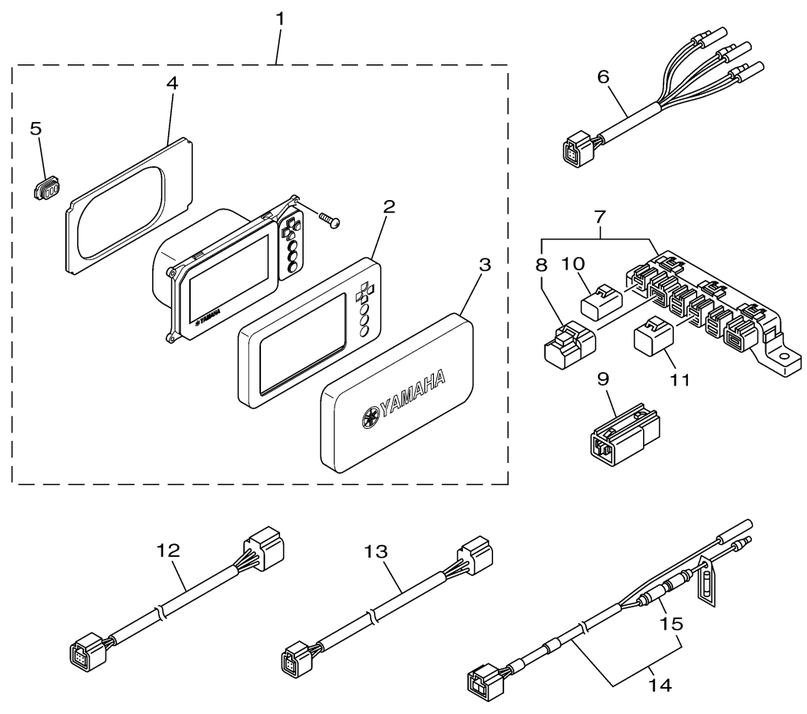

601M10M-P220

6YC MULTIFUNCTION METER

Ref No.	Part Number	Description	Qty	Remarks
1	6YC-83710-03-00	MULTI DISPLAY ASSY	1	
2	6YC-83512-00-00	. .RING, SPEED METER	1	
3	6YC-87278-00-00	. .COVER, METER	1	
4	6YC-12223-00-00	. .SEAL	1	
5	6YC-82532-00-00	. .CAP	1	
6	6Y8-8356N-01-00	LEAD, FUEL TANK & GPS SENDER	1	
7	6Y8-81920-01-00	MULTI HUB ASSY	1	
8	6Y8-85371-01-00	. .END OF LINE RESISTOR	1	
9	6Y8-81920-11-00	IN-LINE HUB ASSY	1	
10	6Y8-82582-01-00	CAP 1 (2PIN)	1	
11	6Y8-82582-11-00	CAP 1 (4PIN)	1	
12	6Y8-82553-01-00	1FT MAIN BUS	1	UR
12	6Y8-82553-11-00	15FT MAIN BUS	1	UR
12	6Y8-82553-21-00	20FT MAIN BUS	1	UR
12	6Y8-82553-31-00	25FT MAIN BUS	1	UR
12	6Y8-82553-41-00	30FT MAIN BUS	1	UR
12	6Y8-82553-50-00	10FT MAIN BUS	1	UR
13	6Y8-82521-01-00	1FT PIGTAIL BUS	1	UR
13	6Y8-82521-11-00	2FT PIGTAIL BUS	1	UR
13	6Y8-82521-21-00	3FT PIGTAIL BUS	1	UR

CONTINUED ON NEXT FRAME >

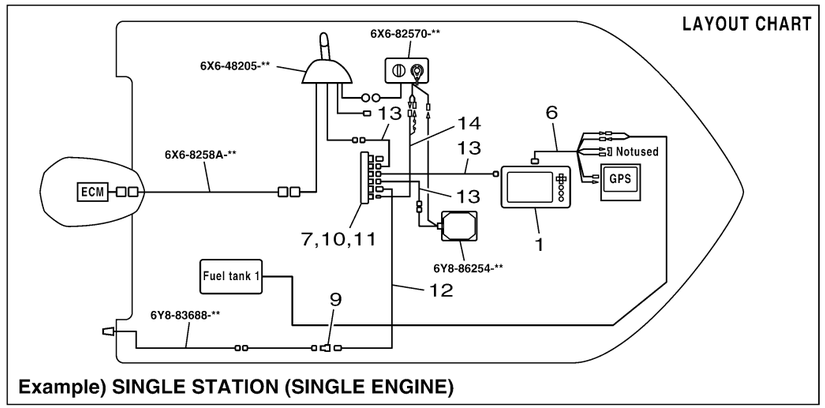

Example) SINGLE STATION (SINGLE ENGINE)

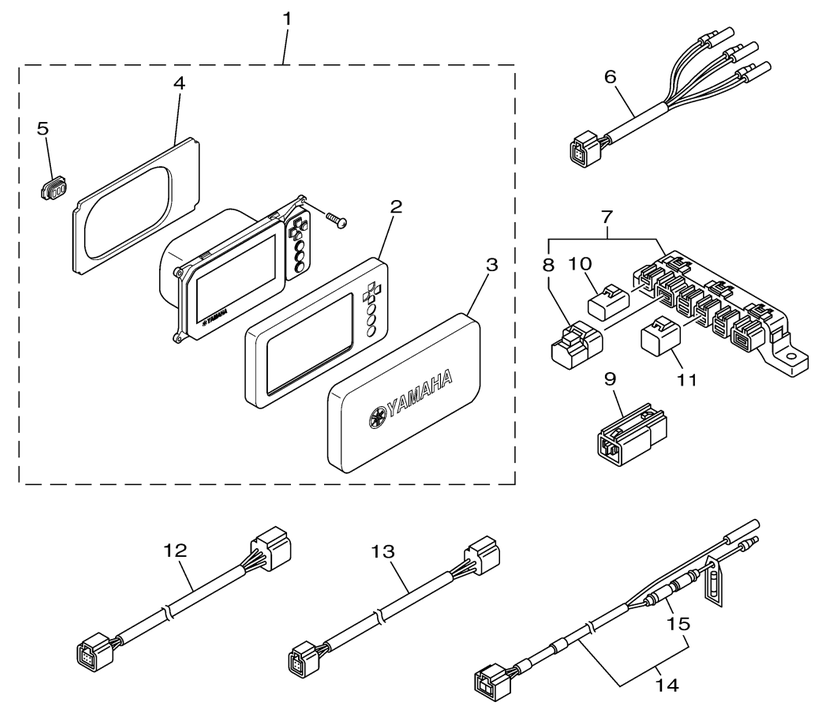

601M10M-P220

6YC MULTIFUNCTION METER

Ref No.	Part Number	Description	Qty	Remarks
13	6Y8-82521-31-00	6FT PIGTAIL BUS	1	UR
13	6Y8-82521-41-00	9FT PIGTAIL BUS	1	UR
13	6Y8-82521-51-00	12FT PIGTAIL BUS	1	UR
14	6Y8-83553-02-00	8FT POWER WIRE	1	
15	6G1-82151-01-00	. .FUSE (10A)	1	