ANALOG TACHOMETER

Ref. No.	Description	Part No.	Applicable model
1	Without indicators BLK panel	6Y7-83540-21	Above 9.9 (Pre-mixed) FT8 (T8),F9.9 -F25 (FT/T25)
2	Without indicators WHT panel	6Y7-83540-30	
9	With overheat & oil indicators BLK panel	6Y7-83540-81	Above 40 (3-cyl) w/ oil injection Above F30 [Mechanical RC]
	With overheat & oil indicators WHT panel	6Y7-83540-91	

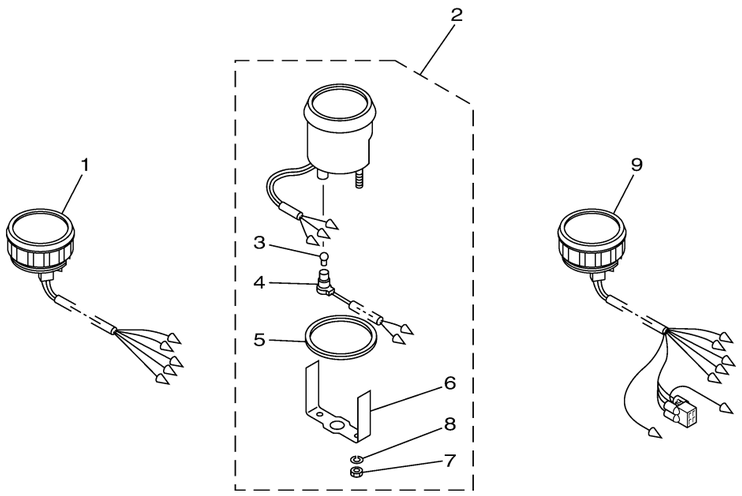

601M10M-U020

METER 2

Ref No.	Part Number	Description	Qty	Remarks
1	6Y7-83540-21-00	TACHOMETER ASSY	1	WITHOUT OIL LAMP
2	6Y7-83540-30-00	TACHOMETER ASSY	1	WITHOUT OIL LAMP
3	6Y5-83517-00-00	. .BULB (T10, 12V-1.7W)	1	
4	6Y5-83536-10-00	. .SOCKET, METER	1	
5	6Y5-83523-00-00	. .DAMPER	1	
6	6Y5-83514-00-00	. .PLATE, FITTING	1	
7	95380-05600-00	. .NUT	2	
8	92990-05100-00	. WASHER, SPRING	2	
9	6Y7-83540-81-00	TACHOMETER ASSY	1	UR WITH OIL/TEMP LAMP
9	6Y7-83540-91-00	TACHOMETER ASSY	1	UR WITH OIL/TEMP LAMP