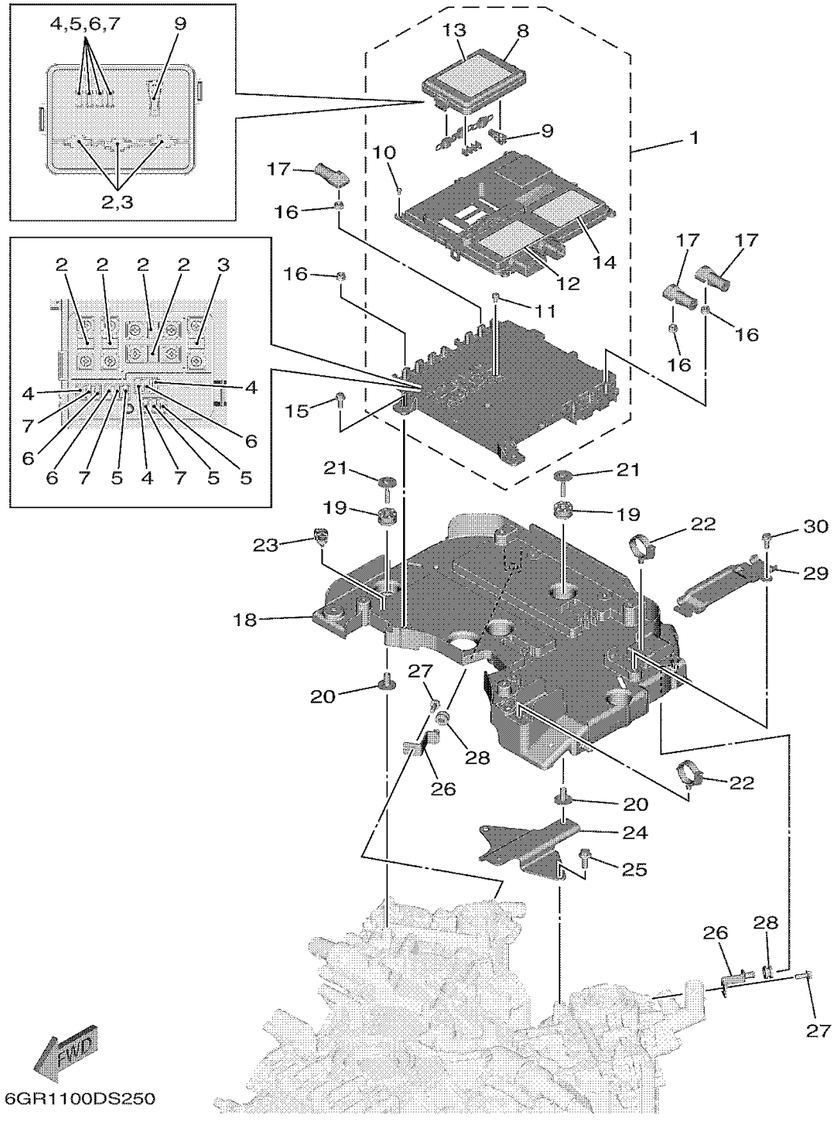

6GR1100DS250

ELECTRICAL 4

Ref No.	Part Number	Description	Qty	Remarks
1	6GR-W85AA-01-00	ELECTRIC POWER MANAGEMENT UNIT	1	
2	6GR-82151-10-00	. .FUSE (70A)	6	
3	6GR-82151-00-00	. .FUSE (100A)	2	
4	6CB-82151-00-00	. .FUSE (10A)	4	
5	6CB-82151-10-00	. .FUSE (15A)	4	
6	6CB-82151-20-00	. .FUSE (20A)	4	
7	6CB-82151-30-00	. .FUSE (30A)	4	
8	6GR-85544-00-00	. .CASE	1	
9	6CB-2812A-00-00	. .PULLER, FUSE	1	
10	6P2-82113-00-00	. .SCREW (M3)	7	
11	68F-82846-00-00	. .SCREW, PAN HEAD (M5)	10	
12	6GR-81919-01-00	. .GRAPHIC, REGULATOR	1	
13	6GR-81919-11-00	. .GRAPHIC, REGULATOR	1	
14	6GR-81919-20-00	. .GRAPHIC, REGULATOR	1	
15	95D95-06016-00	BOLT, FLANGE DEEP RECESS	4	
16	95780-06500-00	NUT, FLANGE	10	
17	6GR-82119-00-00	.COVER, LEAD WIRE	3	
18	6GR-82589-00-00	PROTECTER, WIRE HARNESS	1	
19	68F-85516-01-00	SPACER	4	
20	90387-06176-00	COLLAR	4	

CONTINUED ON NEXT FRAME >

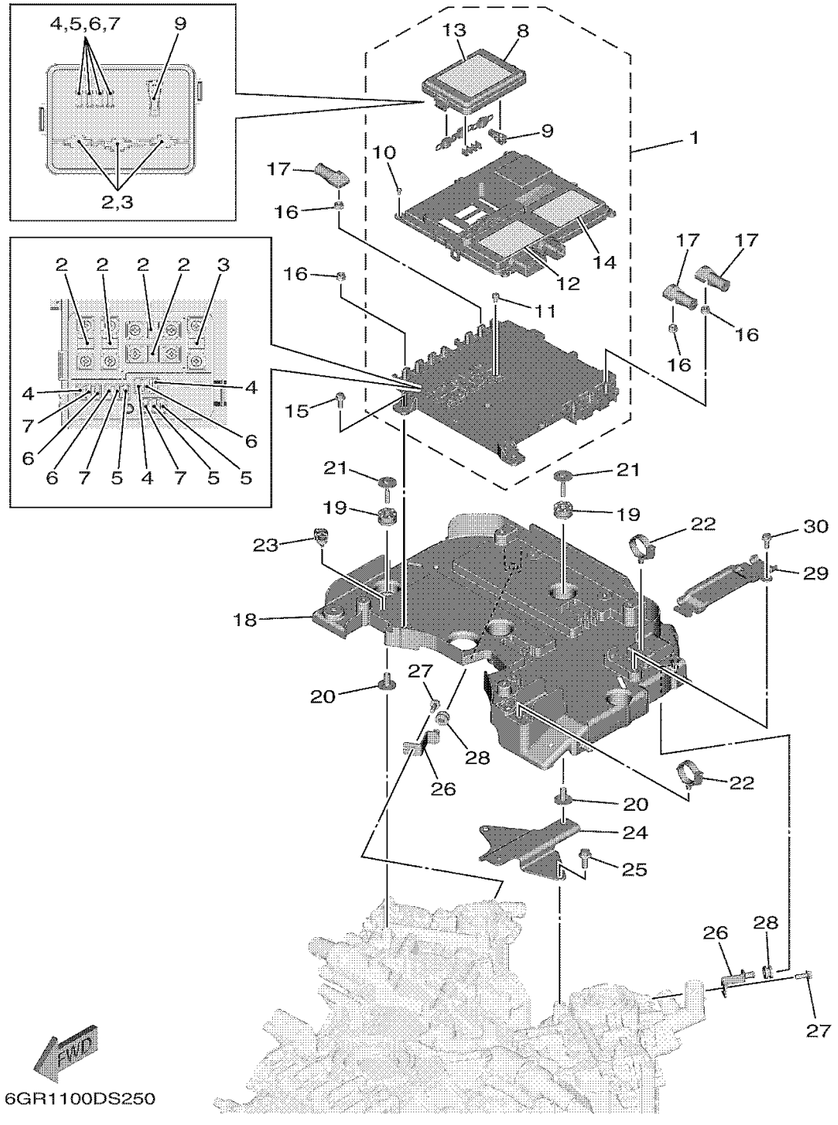

ELECTRICAL 4

Ref No.	Part Number	Description	Qty	Remarks
21	68F-85119-00-00	BOLT	4	
22	90464-30001-00	CLAMP	2	
23	90464-13249-00	CLAMP	1	
24	6GR-82171-01-00	STAY, FUSE BOX	1	
25	95D95-08020-00	BOLT, FLANGE DEEP RECESS	2	
26	6GR-8272U-00-00	PLATE, JOINT	2	
27	95D95-06016-00	BOLT, FLANGE DEEP RECESS	2	
28	90480-12314-00	GROMMET	2	
29	6GR-85525-00-00	COVER	1	
30	95D95-06016-00	BOLT, FLANGE DEEP RECESS	1	