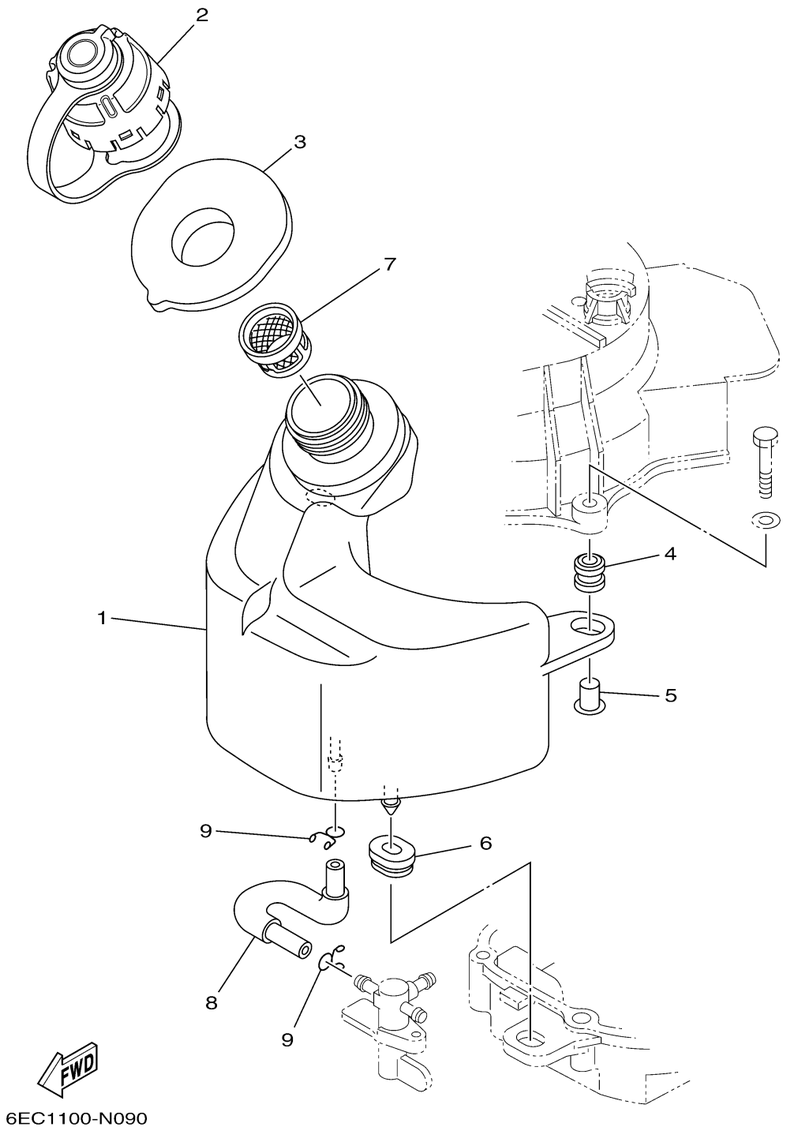

6EC1100-N090

FUEL 1

Ref No.	Part Number	Description	Qty	Remarks
1	6EE-F4111-12-00	TANK, FUEL	1	
2	6BX-24610-10-00	CAP ASSY	1	
3	6BX-24641-00-00	GASKET, CAP 1	1	
4	6A0-82317-01-00	DAMPER, IGNITION COIL	2	
5	90387-06119-00	COLLAR	2	
6	90480-01559-00	GROMMET	1	
7	6EE-F4167-00-00	STRAINER	1	
8	6EE-F4311-10-00	PIPE, FUEL 1	1	
9	90467-09M09-00	CLIP	2	