703 REMOTE CONTROL

Part No.	Throttle		Choke	PTT	Coupler			Mount		Remarks
	Push	Pull			7-pin	10-pin	2-pin	R	L	
703-48210-24		1	1			1		1		
703-48230-24		1	1		1			1		For analog gauge only
703-48250-25		1	1	1		1		1		
703-48272-25		1	1	1		1		1		For additional trim SW
703-48201-24	1		1			1		1		
703-48201-B4	1					1		1		
703-48203-24	1		1		1			1		For analog gauge only
703-48205-25	1		1	1		1		1		
703-48205-B5	1			1		1		1		
703-48207-25	1		1	1		1		1		For additional trim SW
703-48206-23	1						1	1		Successor model of 701 RC
703-48260-23		1					1	1		Successor model of 701 RC
703-48290-02	Twin attachment kit									For twin engine application

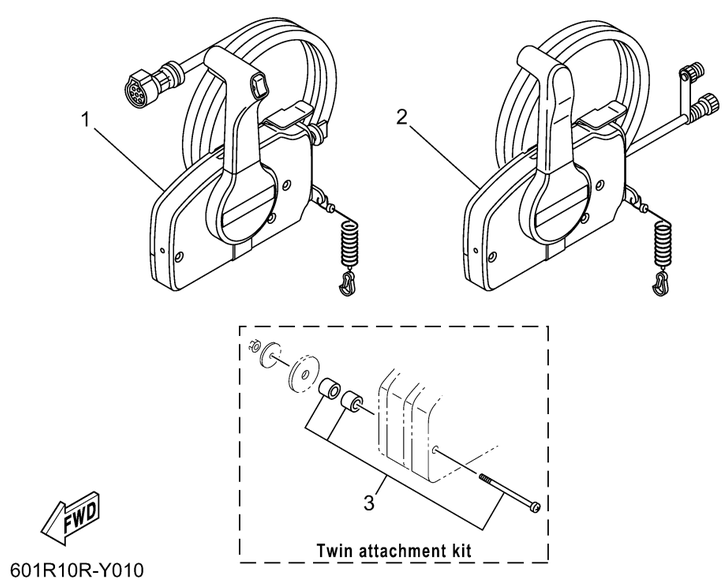

601R10R-Y010

REMOTE CONTROL BOX 1

Ref No.	Part Number	Description	Qty	Remarks
1	703-48230-24-00	REMOTE CONTROL ASSY (7P)	1	UR WITHOUT PT/T SW.
1	703-48250-25-00	REMOTE CONTROL ASSY (10P, PTT)	1	UR WITH PT/T SW.
1	703-48272-25-00	REMOTE CONTROL ASSY (10P, PTT)	1	UR WITH PT/T SW.
1	703-48201-24-00	REMOTE CONTROL ASSY (10P)	1	UR WITHOUT PT/T SW.
1	703-48201-B4-00	REMOTE CONTROL ASSY (10P)	1	UR WITHOUT PT/T SW.
1	703-48203-24-00	REMOTE CONTROL ASSY (7P)	1	UR WITHOUT PT/T SW.
1	703-48205-25-00	REMOTE CONTROL ASSY (10P, PTT)	1	UR WITH PT/T SW.
1	703-48205-B5-00	REMOTE CONTROL ASSY (10P, PTT)	1	UR WITH PT/T SW.
1	703-48207-25-00	REMOTE CONTROL ASSY (10P, PTT)	1	UR WITH PT/T SW.
1	703-48210-24-00	REMOTE CONTROL ASSY (10P)	1	UR WITHOUT PT/T SW.
2	703-48206-23-00	REMOTE CONTROL ASSY	1	UR WITHOUT PT/T SW.
2	703-48260-23-00	REMOTE CONTROL ASSY	1	UR WITHOUT PT/T SW.
3	703-48290-02-00	TWIN ATTACHMENT	1	FOR TWIN