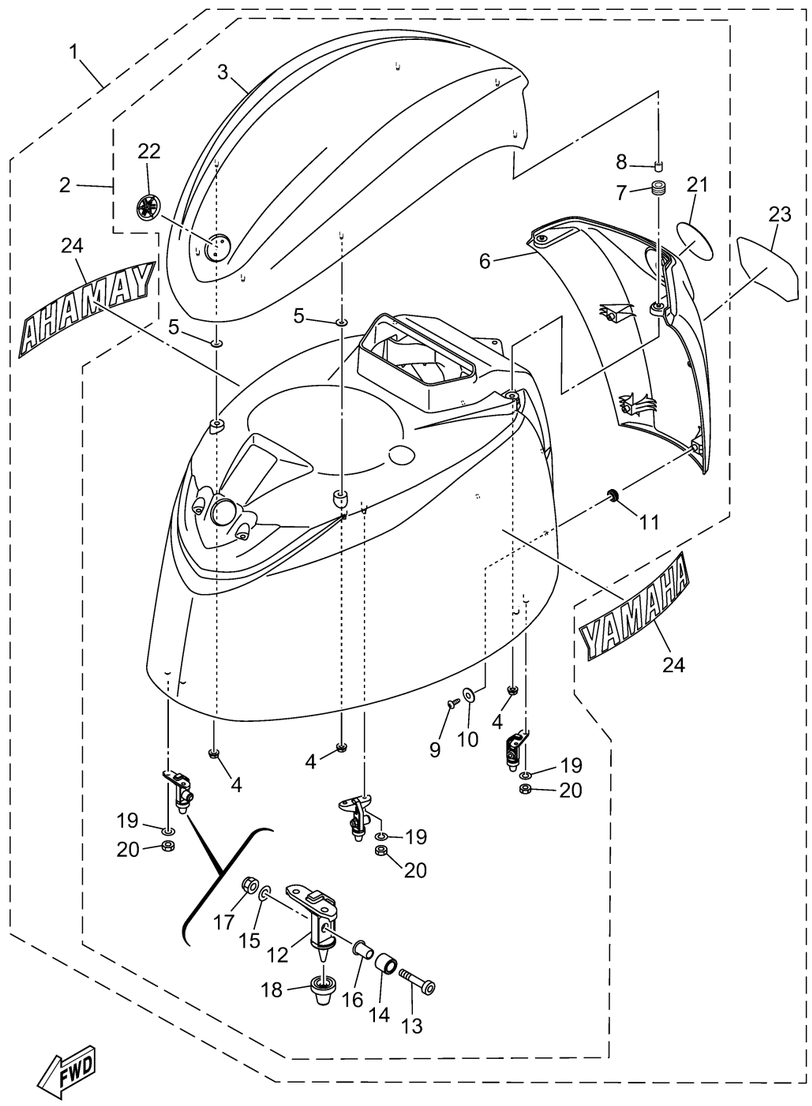

6MA410A-1020

TOP COWLING

Ref No.	Part Number	Description	Qty	Remarks
1	6MA-42610-10-CE	TOP COWLING ASSY	0	WHITE, JET-DRIVE
1	6MA-42610-01-8D	TOP COWLING ASSY	1	GRAY, JET-DRIVE
2	6LH-4261A-02-CE	. .TOP COWLING W/O GRAPHICS	0	WHITE
2	6LH-4261A-02-8D	. .TOP COWLING W/O GRAPHICS	1	GRAY
3	6LH-42613-00-CE	. . ..MOLDING, AIR DUCT	0	WHITE
3	6LH-42613-00-8D	. . ..MOLDING, AIR DUCT	1	GRAY
4	90179-06M28-00	. . NUT	7	
5	6CB-42545-00-00	. . ..WASHER, PLAIN	4	
6	6LH-42625-00-CE	. . ..PANEL, REAR	0	WHITE
6	6LH-42625-00-8D	. . ..PANEL, REAR	1	GRAY
7	90480-13004-00	. . ..GROMMET	2	
8	90387-07054-00	. . ..COLLAR	2	
9	97780-50016-00	. . ..SCREW, TAPPING	4	
10	90201-053R1-00	. . ..WASHER, PLATE	4	
11	90480-16009-00	. . GROMMET	4	
12	6CB-42647-B0-00	. . ..HOLDER, CLAMP BAND	3	
13	90111-08078-00	. . ..BOLT, HEXAGON SOCKET BUTTON	3	
14	90387-10094-00	. . ..COLLAR	3	
15	92990-08600-00	. . ..WASHER, PLATE	3	
16	90387-08M45-00	. . ..COLLAR	3	

CONTINUED ON NEXT FRAME >

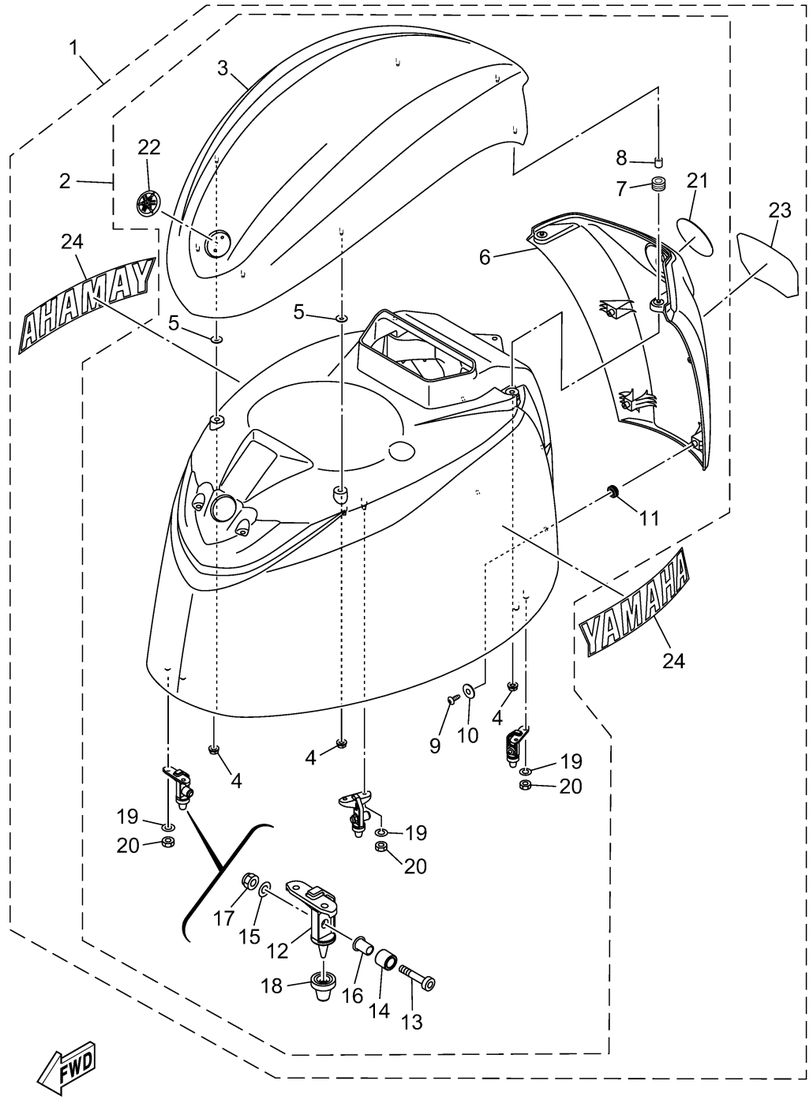

6MA410A-1020

TOP COWLING

Ref No.	Part Number	Description	Qty	Remarks
17	95780-08300-00	. . ..NUT, FLANGE	3	
18	6AW-42663-01-00	. . ..DAMPER 2	3	
19	92990-06100-00	. . ..WASHER, SPRING	6	
20	95380-06600-00	. . NUT, HEXAGON	6	
21	6LH-42697-00-00	. . ..TUNING FORK MARK	1	
22	6AH-42697-10-00	. . ..TUNING FORK MARK	1	
23	6MA-42678-00-00	. .GRAPHIC, REAR	1	
24	6LW-2153A-10-00	. .EMBLEM, YAMAHA	0	WHITE
24	6LW-2153A-00-00	. .EMBLEM, YAMAHA	2	GRAY